FLOS

D301T01C3EAF2 Steel

SuperWire T

Designed by Formafantasma, 2024



18W - 1200lm - 2700K - CRI> 90

SuperWire is the first family of modular lamps designed by Formafantasma for Flos. A magical and poetic project, with an essential design but a great stage presence, which recalls the work of the great glass masters of the last century. Made of planar glass and polished aluminum, its design originated from the development of a custom-made light source that emits a warm and homogeneous light. Made up of one or more hexagons of planar glass connected by a polished aluminum element, SuperWire lights up its entire surface thanks to a new source developed by the Flos R&D team: a very thin, flat, soft, flexible LED strip measuring up to one meter, which emits a warm and homogeneous light along its entire length and which can be easily removed for replacement and repair, unique in the panorama of LED bulb-less lamps. This table version, consists of a single module h 45 cm, surmounted by a hexagonal glass cover.

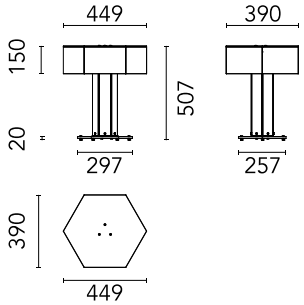

Are you a professional and your project needs consulting and support?

BOOK AN APPOINTMENT

Download

Mounting instructions PDF

Main specifications

EAN	8059607070222
Mounting	Table
Environments	Indoor dry location
Light source type	LED
Light sources included	Yes
LED type	Filament LED
Power (W)	18
System power (W)	18
System flux (lm)	1200

Physical

Colour	Steel
Length (mm)	449
Cord colour	Clear
Cord length (mm)	2000
Net weight (kg)	9
Package volume (m3)	0.2
IP internal	20

Ecodesign and Energy Labelling

This product contains a light source of energy efficiency class **E**

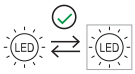

Replaceable (LED only) light source by an end-user

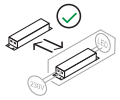

Replaceable control gear by an end-user

©2022 Flos - P.IVA 00290820174 - 2/21/2025

In our constantly evolving world and business, technical upgrades happen every day. This means all product specifications and data are subject to change without warning in order t improve reliability, function, performance or otherwise. We make every effort to ensure the accuracy of our product images, however due to different lighting and screens used for viewing, the colours may vary. Images are indicative of the quality and style of the product but may not represent the precise details of the product you receive. This is because we are constantly working to make improvements. For aesthetic reasons, cables and/or electrical elements are often not shown. Refer to technical data sheets for all technical data. Images and colours are not part of any contract or warranty in any way.

IP
20

Photometric

Lighting type	Total
Light distribution	Asymmetric
CCT (K)	2700
CRI>	90
Extreme cut off	No

Electrical

Insulation class	III
Frequency (Hz)	50/60
Main voltage (Vac)	100-240
Power supply	Remote included
Dimmable	Yes
Power supply type	Dimmable
Dimming interface	Switch Integrated (Remote Dimmable)
Plug type	Type G, Type A, Type C
Batteries inside	No

©2022 Flos - P.IVA 00290820174 - 2/21/2025

In our constantly evolving world and business, technical upgrades happen every day. This means all product specifications and data are subject to change without warning in order t improve reliability, function, performance or otherwise. We make every effort to ensure the accuracy of our product images, however due to different lighting and screens used for viewing, the colours may vary. Images are indicative of the quality and style of the product but may not represent the precise details of the product you receive. This is because we are constantly working to make improvements. For aesthetic reasons, cables and/or electrical elements are often not shown. Refer to technical data sheets for all technical data. Images and colours are not part of any contract or warranty in any way.

Spare Parts

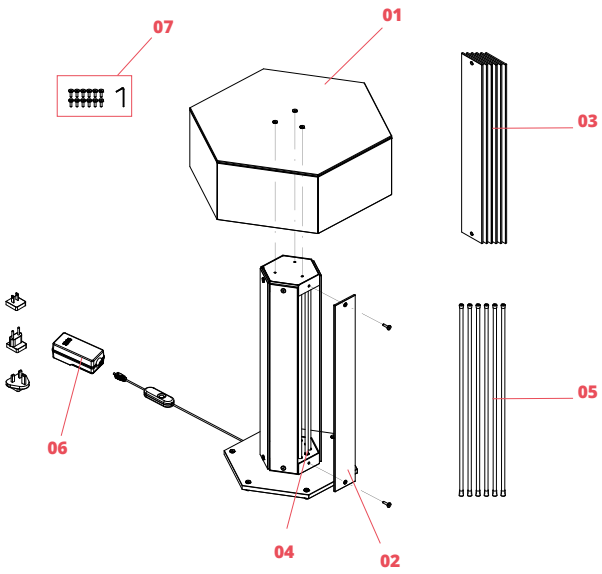

00.	Kit with special screws	RF301T100
00.	Superwire T Led L450 25MA/42VDC/27K filament	RF301T200
00.	Superwire T Led L450 25MA/42VDC/27K filament kit 6 pcs	RF301T300
00.	Superwire T short glass plate and bushings	RF301T400
00.	Superwire T short glass plates and bushings kit 6 pcs	RF301T500

©2022 Flos - P.IVA 00290820174 - 2/21/2025

In our constantly evolving world and business, technical upgrades happen every day. This means all product specifications and data are subject to change without warning in order t improve reliability, function, performance or otherwise. We make every effort to ensure the accuracy of our product images, however due to different lighting and screens used for viewing, the colours may vary. Images are indicative of the quality and style of the product but may not represent the precise details of the product you receive. This is because we are constantly working to make improvements. For aesthetic reasons, cables and/or electrical elements are often not shown. Refer to technical data sheets for all technical data. Images and colours are not part of any contract or warranty in any way.



RF301T100

Kit with special screws



RF301T200

Superwire T Led L450 25MA/42VDC/27K filament



RF301T300

Superwire T Led L450 25MA/42VDC/27K filament kit 6 pcs



RF301T400

Superwire T short glass plate and bushings



RF301T500

Superwire T short glass plates and bushings kit 6 pcs

©2022 Flos - P.IVA 00290820174 - 2/21/2025

In our constantly evolving world and business, technical upgrades happen every day. This means all product specifications and data are subject to change without warning in order t improve reliability, function, performance or otherwise. We make every effort to ensure the accuracy of our product images, however due to different lighting and screens used for viewing, the colours may vary. Images are indicative of the quality and style of the product but may not represent the precise details of the product you receive. This is because we are constantly working to make improvements. For aesthetic reasons, cables and/or electrical elements are often not shown. Refer to technical data sheets for all technical data. Images and colours are not part of any contract or warranty in any way.