WORKS 2014

I **ISTRUZIONI DI MONTAGGIO**
Carrello - Scaffale

GB **ASSEMBLY INSTRUCTIONS**
Trolley - Shelving system

F **INSTRUCTIONS DE MONTAGE**
Chariot - Rayon

D **MONTAGEANLEITUNGEN**
Rollwagen - Regal

1

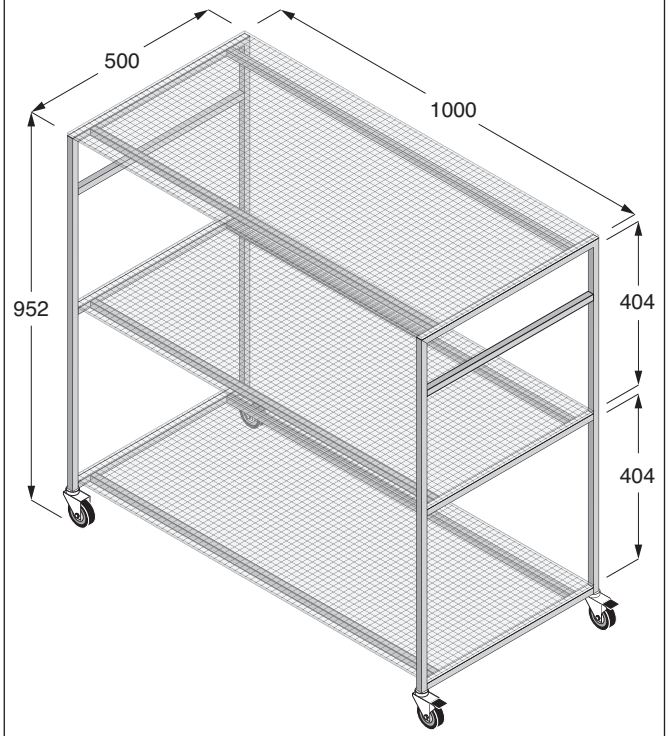
500
1000
952
404
404

GNAQ05

2

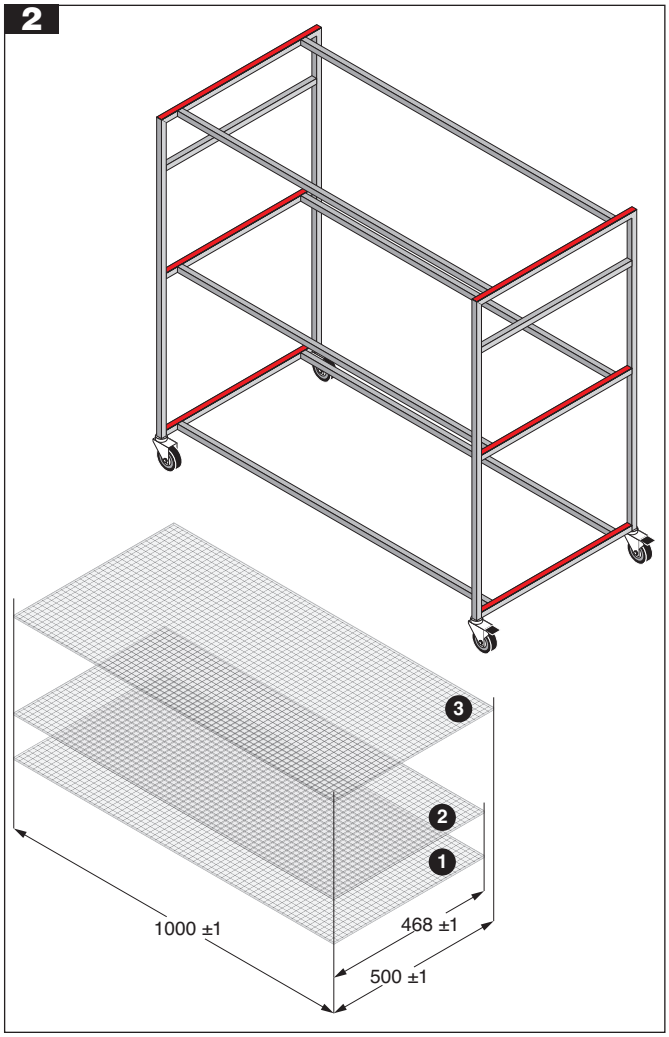
3
2
1
1000 ±1
468 ±1
500 ±1

3


• Biadesivo
• Biadhesive

4

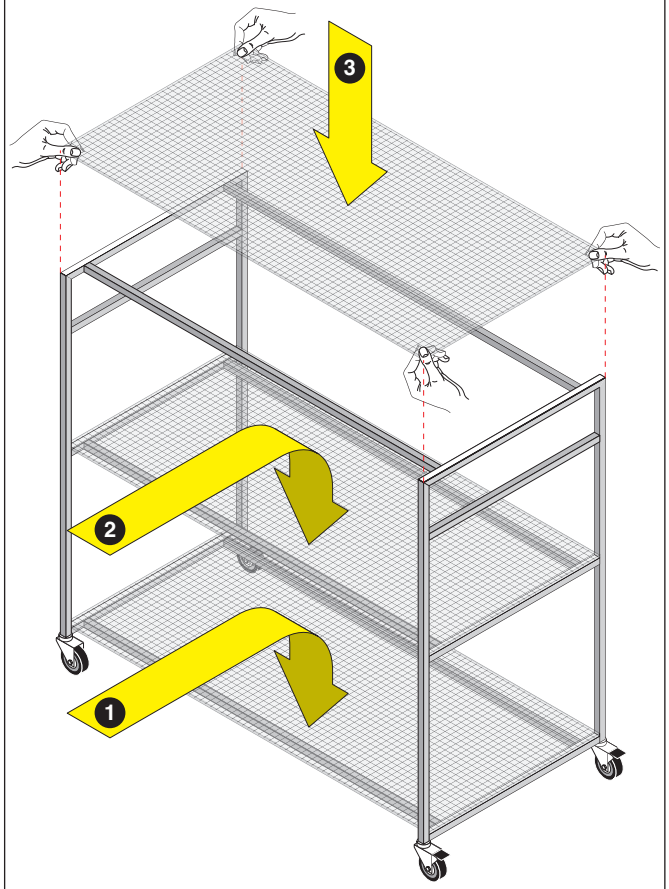
3
2
1

1

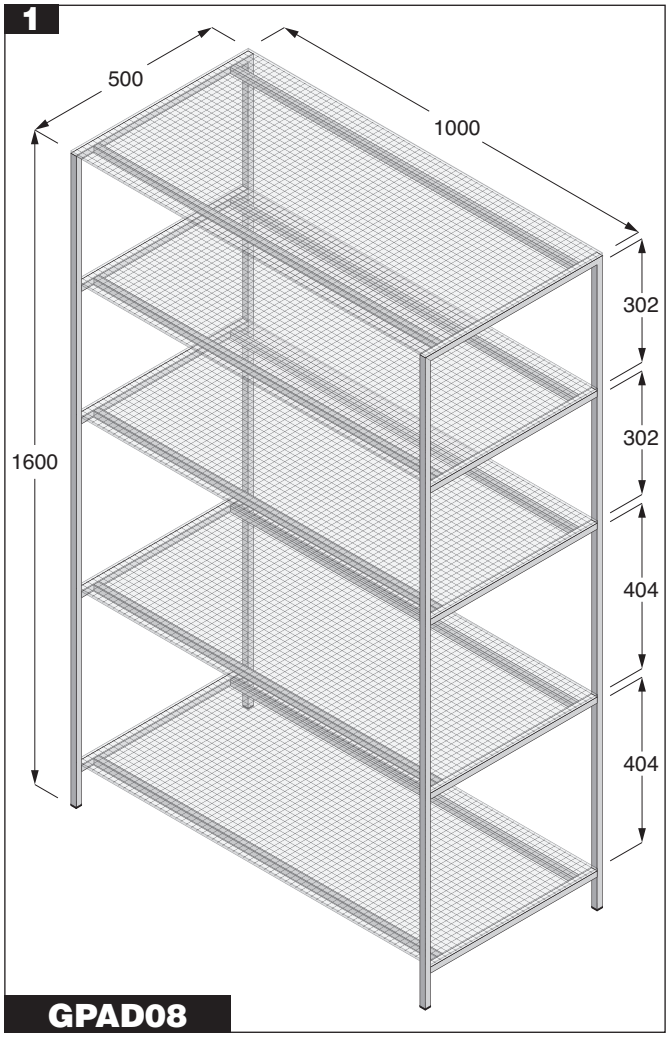
500
1000
1600
302
302
404
404

GPAD08

2

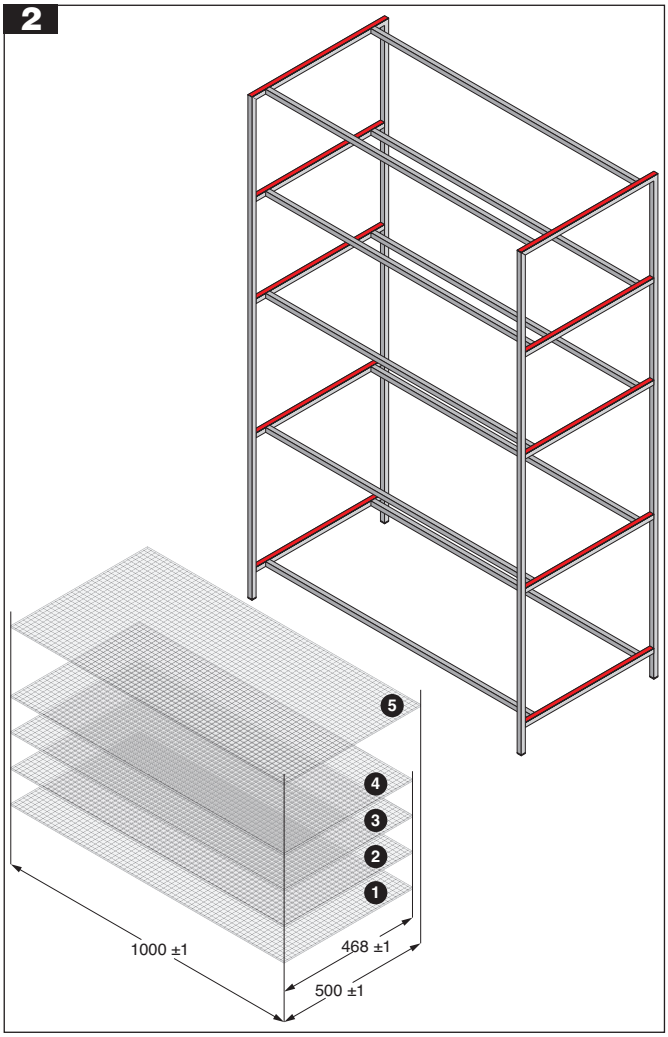
5
4
3
2
1
1000 ±1
468 ±1
500 ±1

3

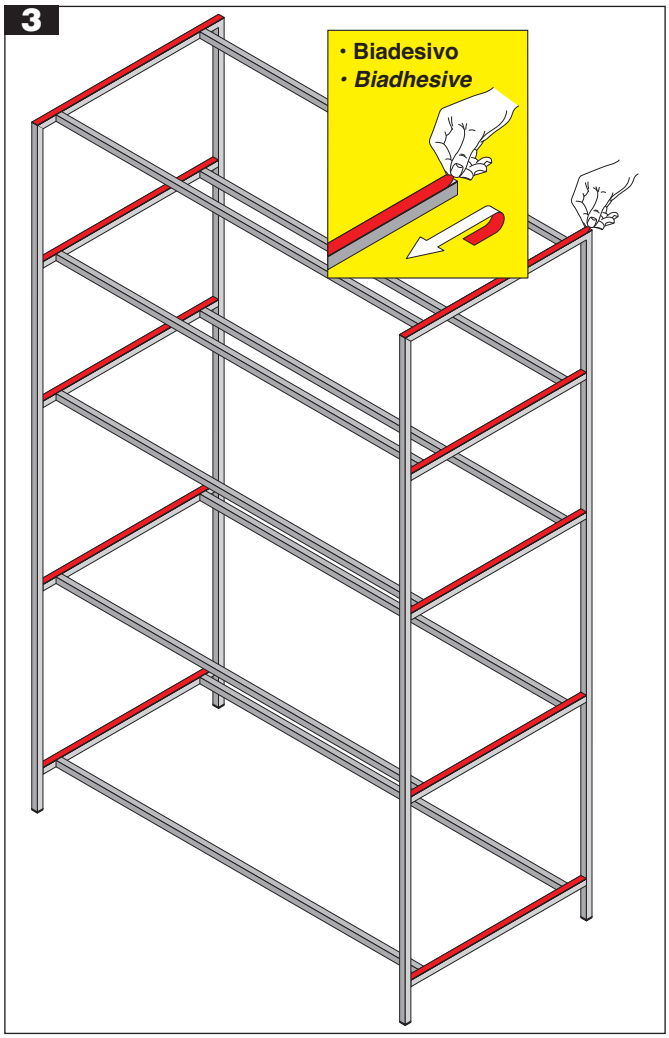
• Biadesivo
• Biadhesive

4

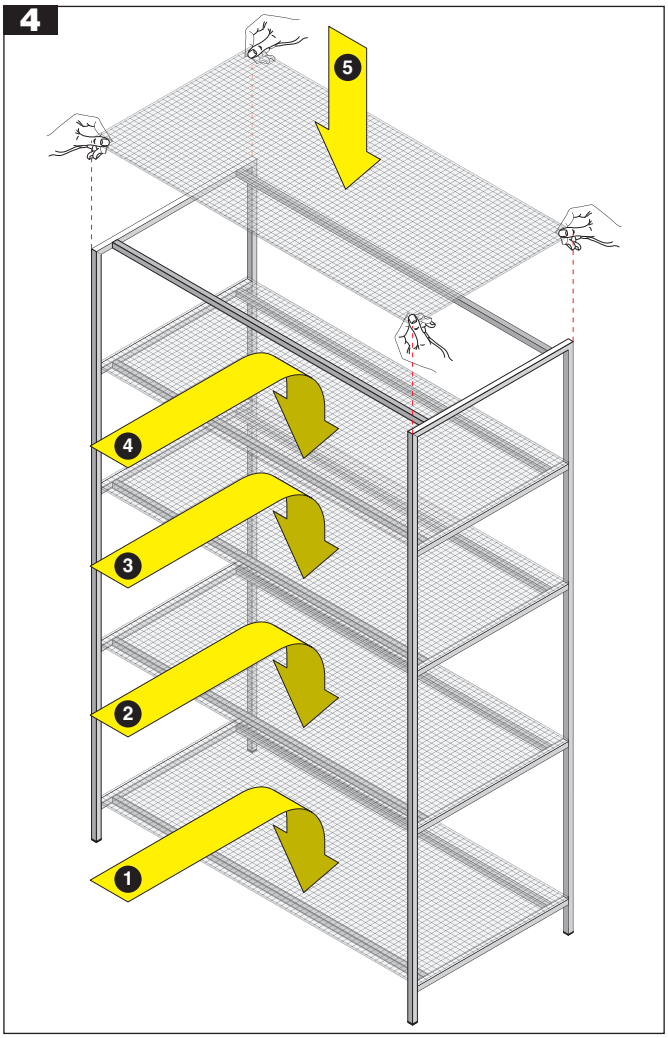
5
4
3
2
1

1

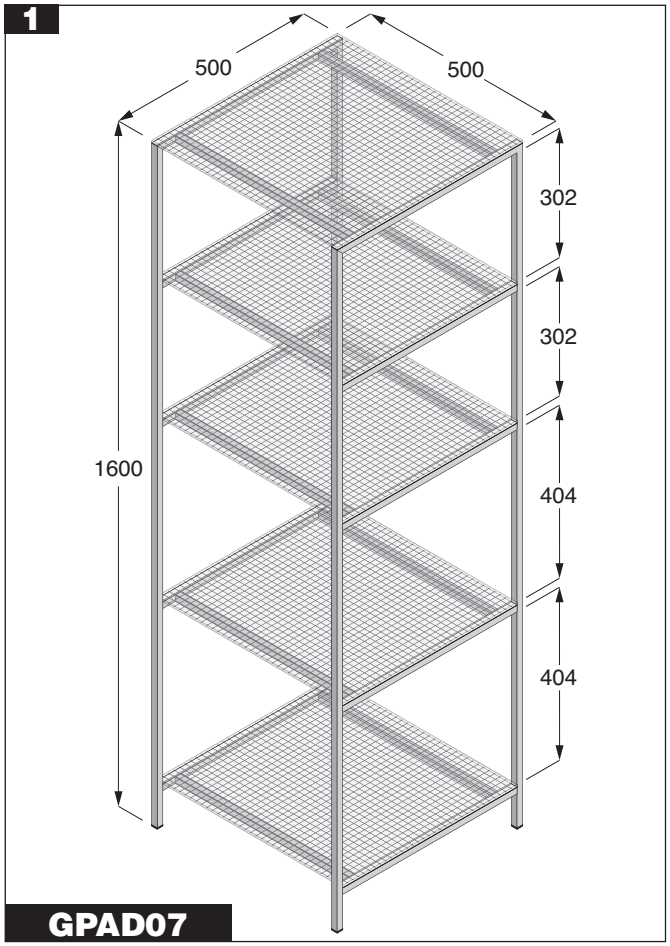

GPAD07

2

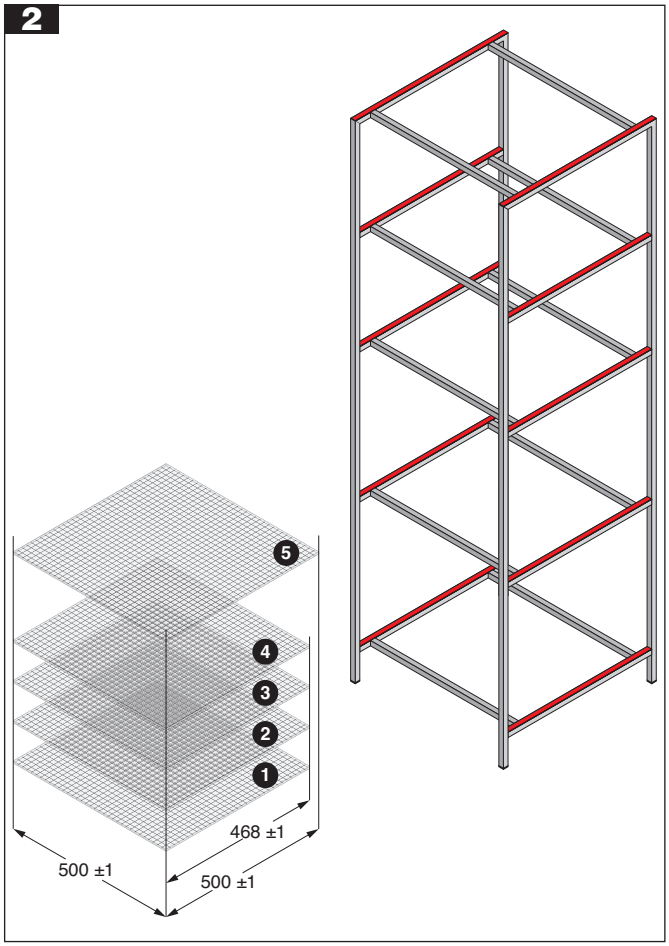

3

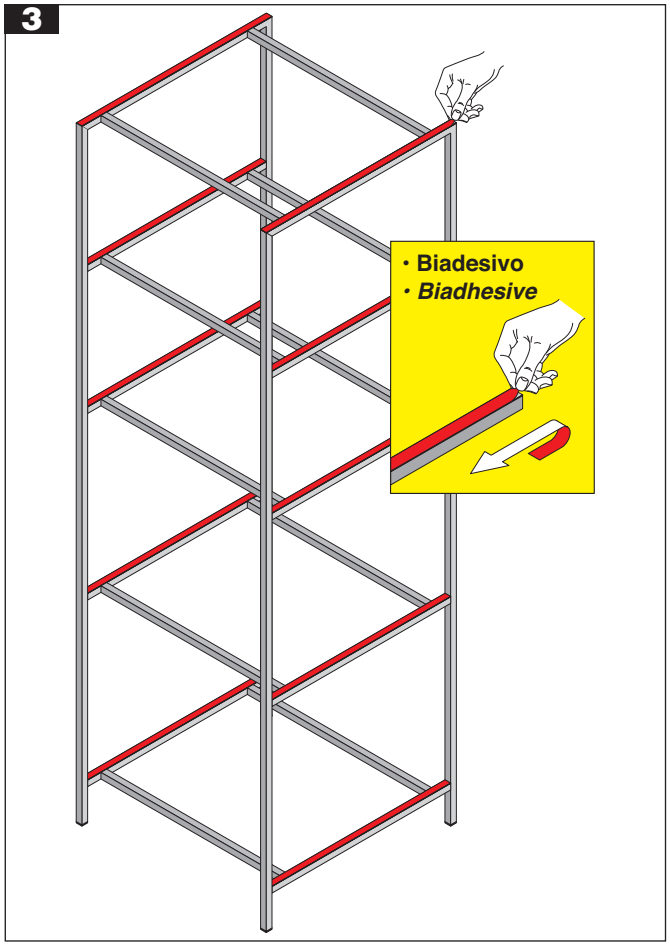

4

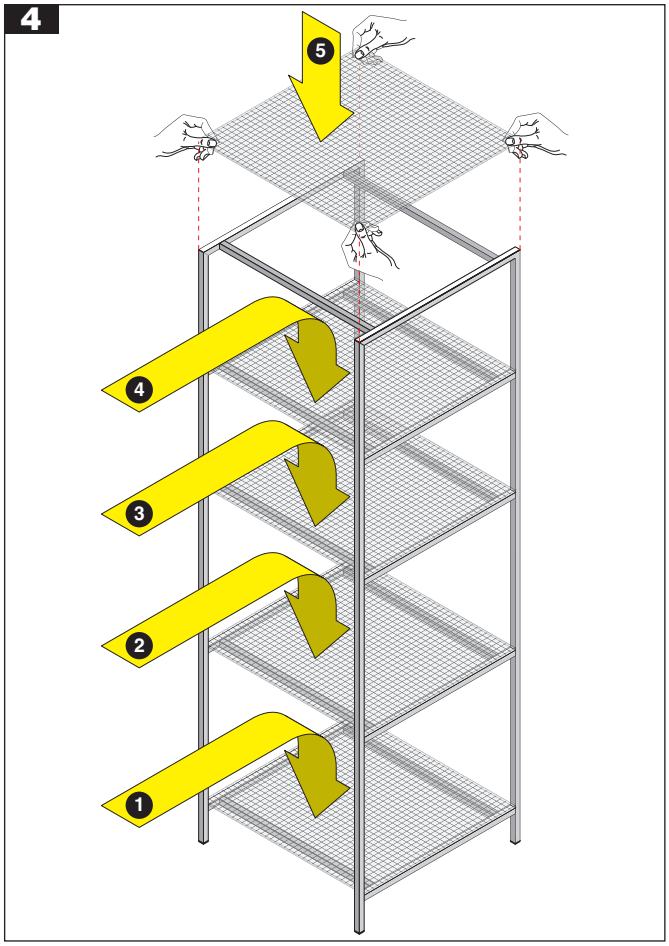

BOFFI s.p.a. - Lentate sul Seveso (MB) - via Oberdan, 70
Tel. 0362/534.1 r.a. - Fax 0362/565077