CTLINE - Single unit, wall-mounted - H 1260 mm

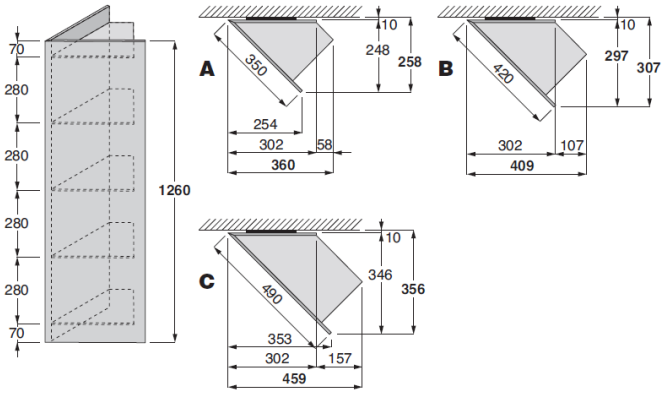

A . . . . . .
B . . . . . .
C . . . . . .

CTLINE - Single unit, wall-mounted - H 1680 mm.

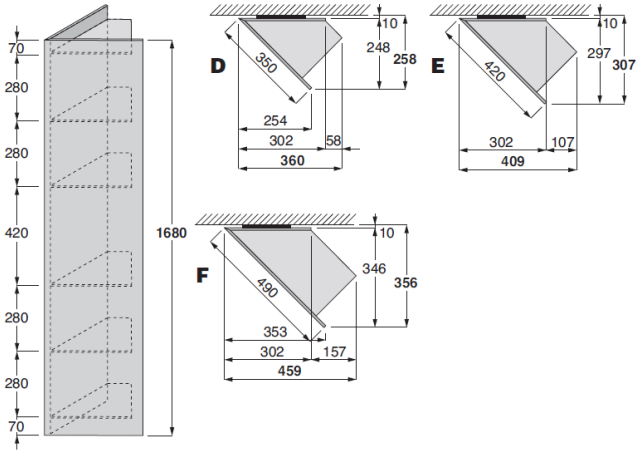

D . . . . . .
E . . . . . .
F . . . . . .

CTLINE - Single unit, wall-mounted, with MIRROR - H 1680 mm.

