RIG STONE

I **ISTRUZIONI DI MONTAGGIO**
Lavabo in marmo, senza troppopieno

GB **ASSEMBLY INSTRUCTIONS**
Washbasin in marble, without overflow

F **INSTRUCTIONS DE MONTAGE**
Lavabo en marbre, sans trop-plein

D **MONTAGEANLEITUNGEN**
Waschbecken in Marmor, ohne Überlauf

Dimensioni d'ingombro e quote di fissaggio - Overall dimensions and fixing points
Dimensions d'encombrement et fixations - Maßen und Befestigungshöhe

WMRGAK01

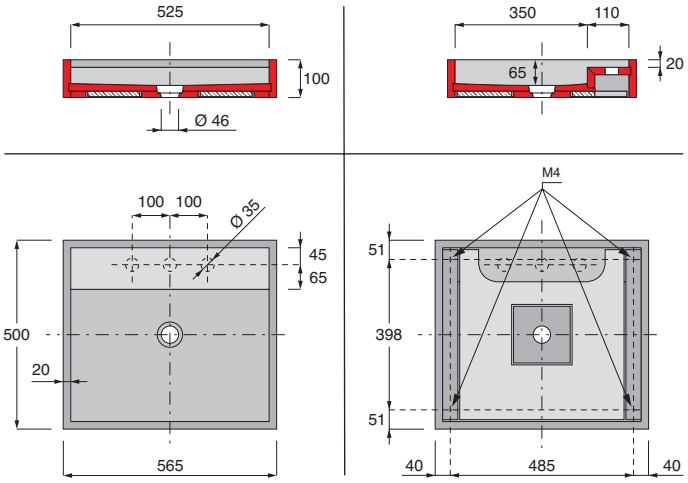

WMRGAK02

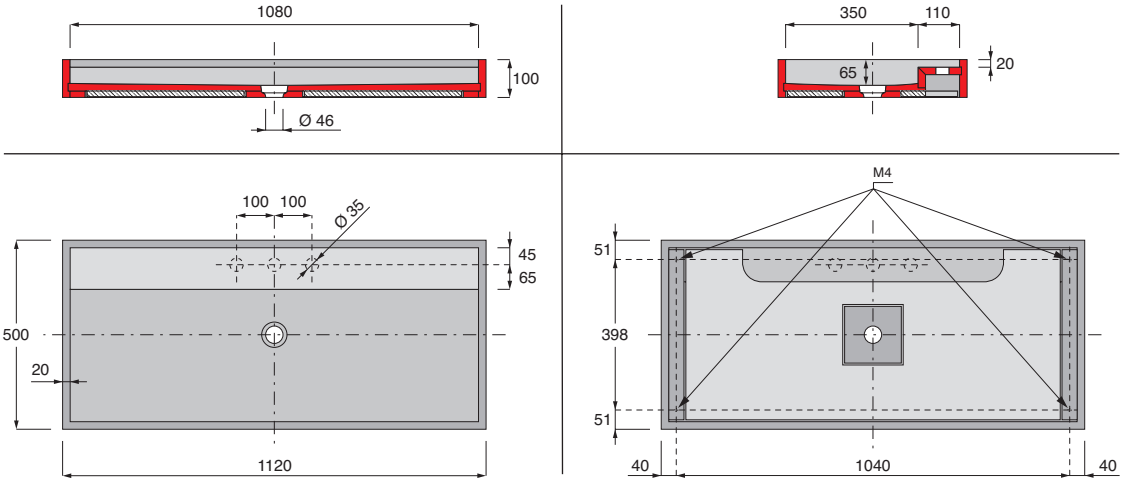

WMRGAK05

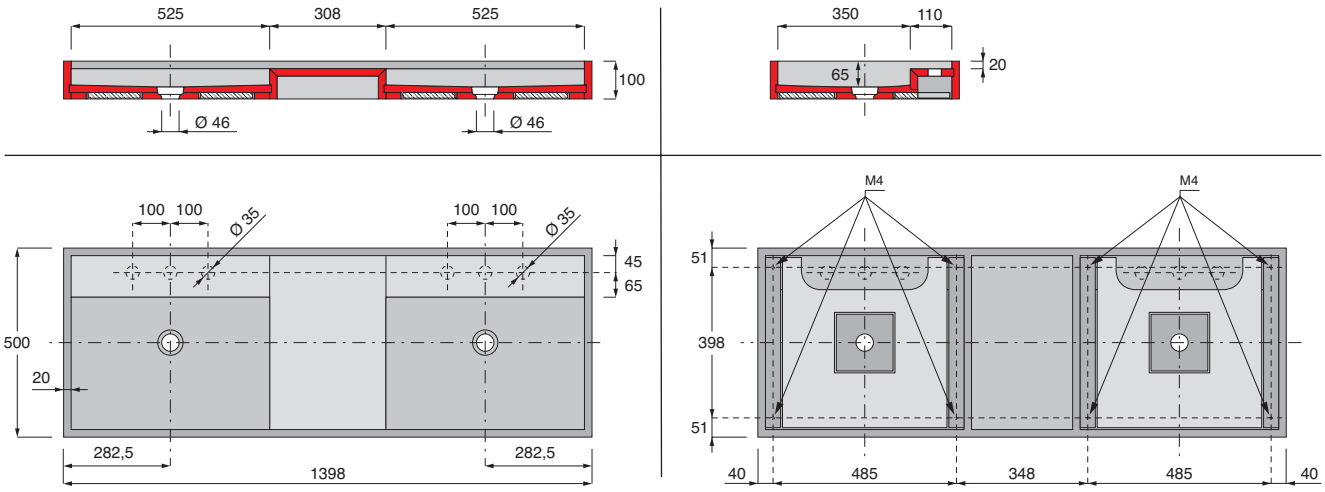

WMRGAK03 S

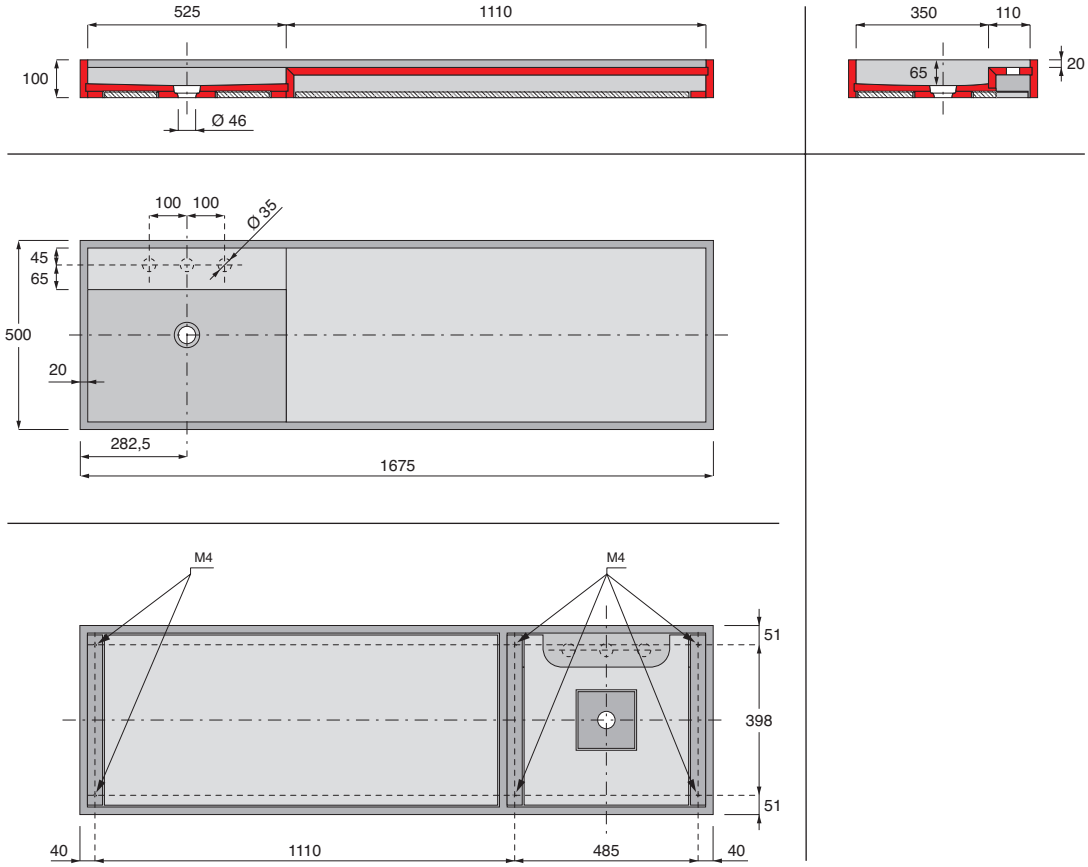

WMRGAK04 S

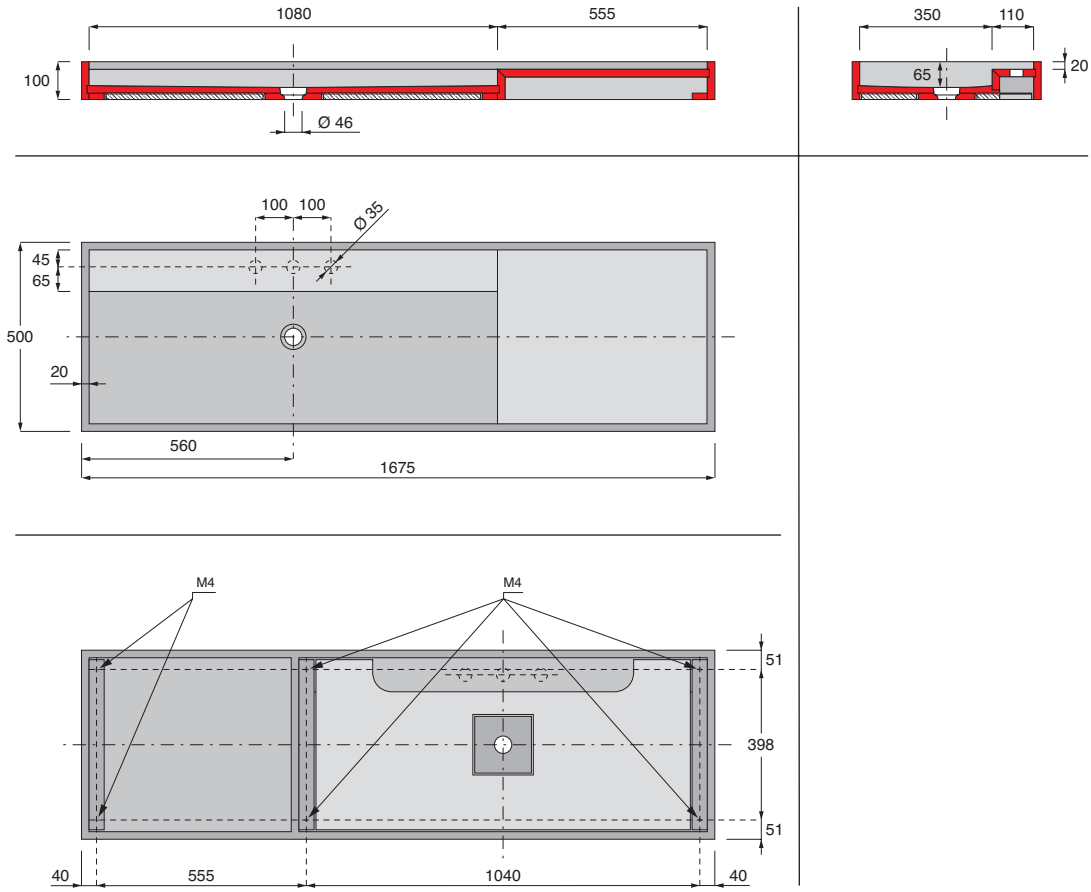

Schema collegamenti idraulici - Hydraulic installation diagram
Schéma raccordements hydrauliques - Positionierung der Hydraulikverbindungen

WMRGAK01 - WMRGAK02
(Composizione ad isola - Island composition - Composition en îlot - Inselkomposition)

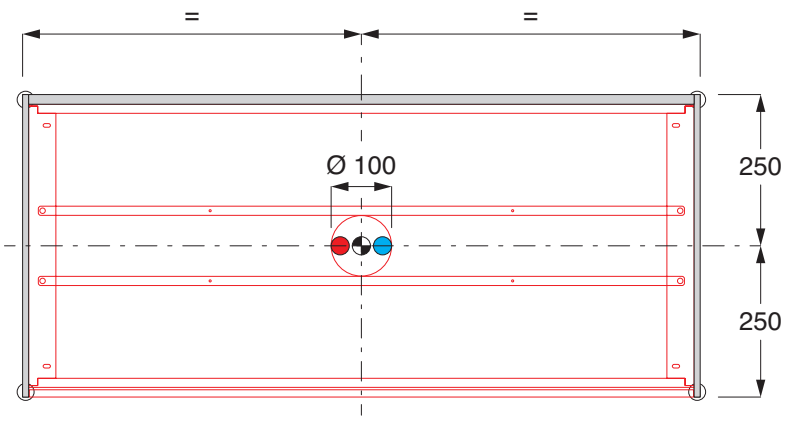

WMRGAK03 S
(Composizione ad isola - Island composition - Composition en îlot - Inselkomposition)

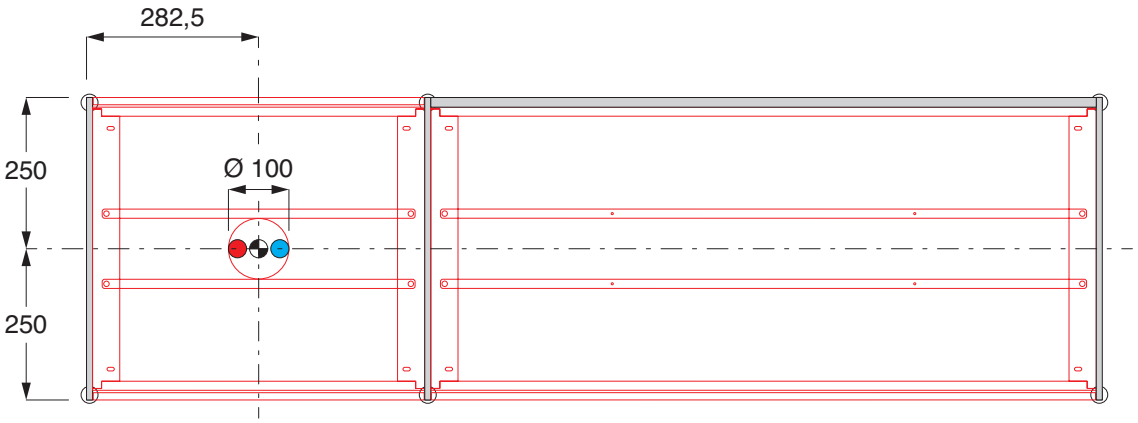

WMRGAK04 S
(Composizione ad isola - Island composition - Composition en îlot - Inselkomposition)

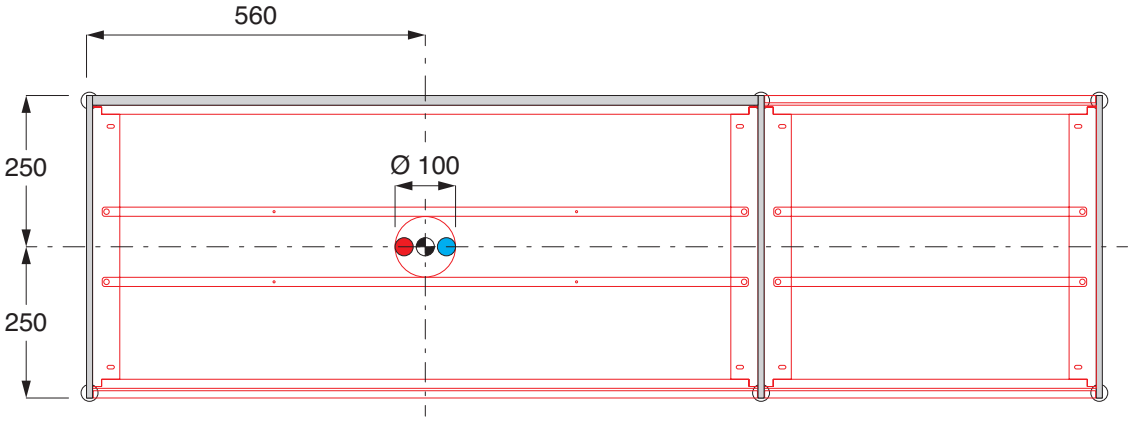

WMRGAK05
(Composizione ad isola - Island composition - Composition en îlot - Inselkomposition)

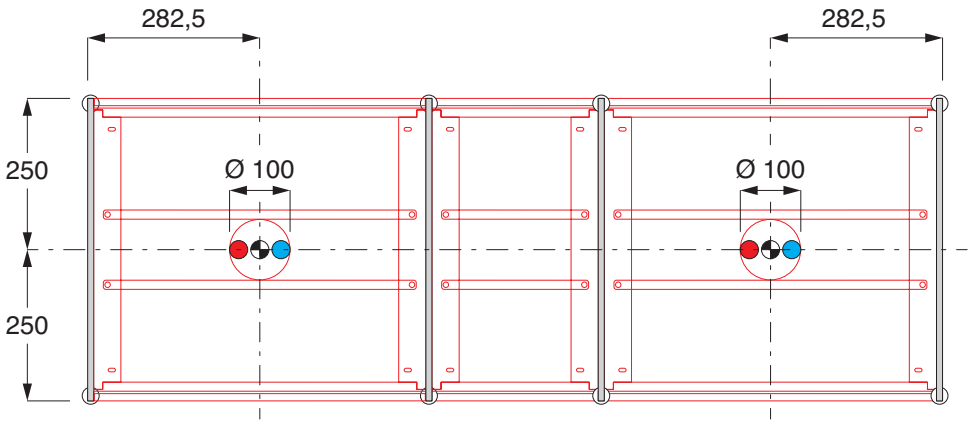

WMRGAK01
(Composizione a parete - Wall-mounted composition - Composition murale - Wandkomposition)

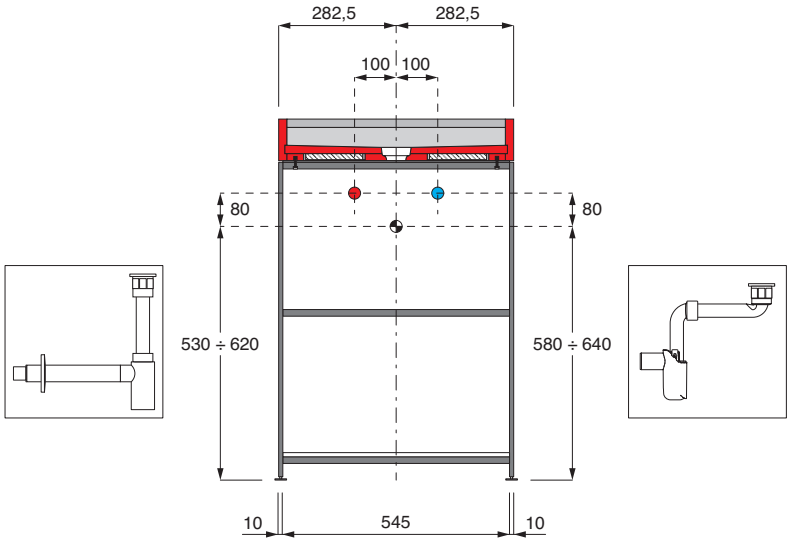

WMRGAK02
(Composizione a parete - Wall-mounted composition - Composition murale - Wandkomposition)

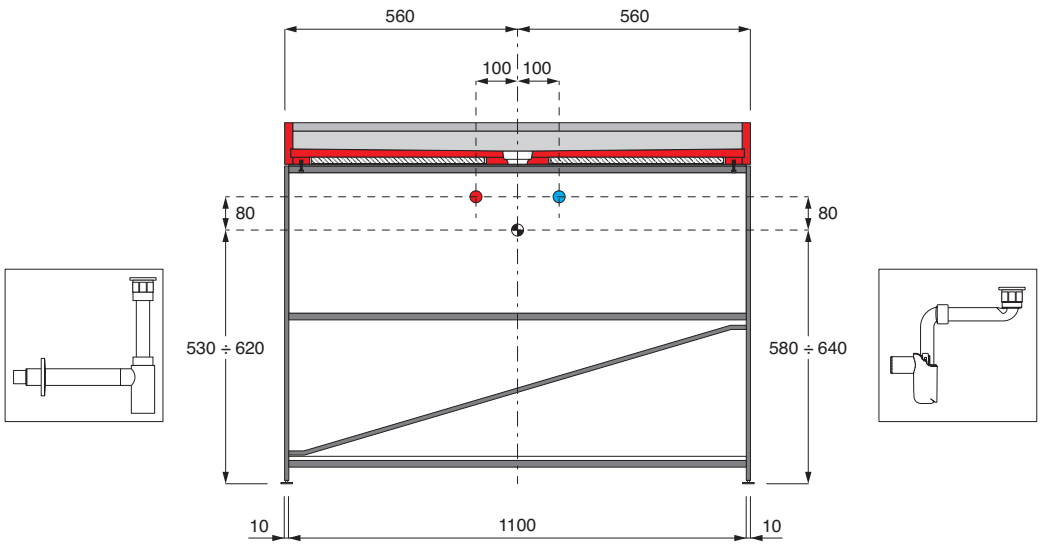

WMRGAK03 S

(Composizione a parete - Wall-mounted composition - Composition murale - Wandkomposition)

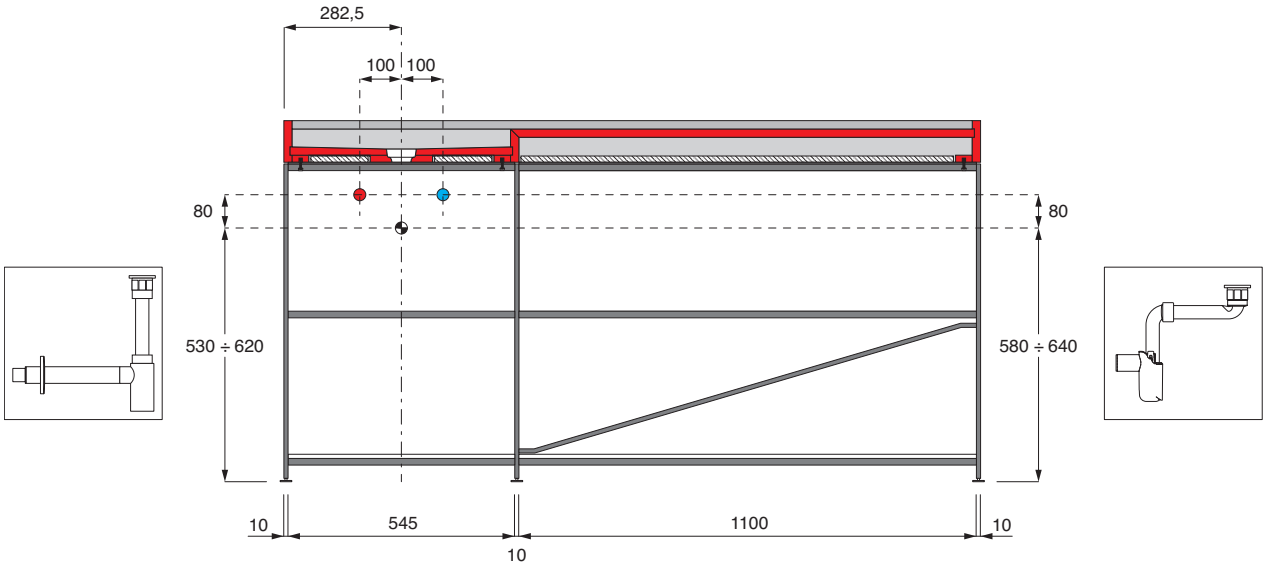

WMRGAK04 S

(Composizione a parete - Wall-mounted composition - Composition murale - Wandkomposition)

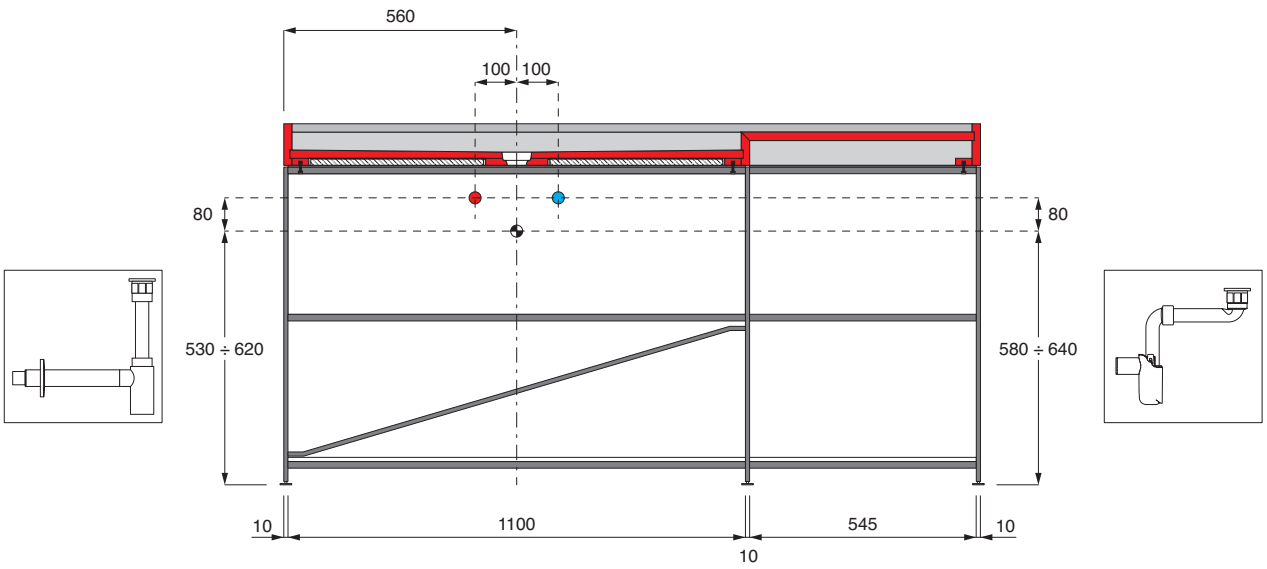

WMRGAK05
(Composizione a parete - Wall-mounted composition - Composition murale - Wandkomposition)

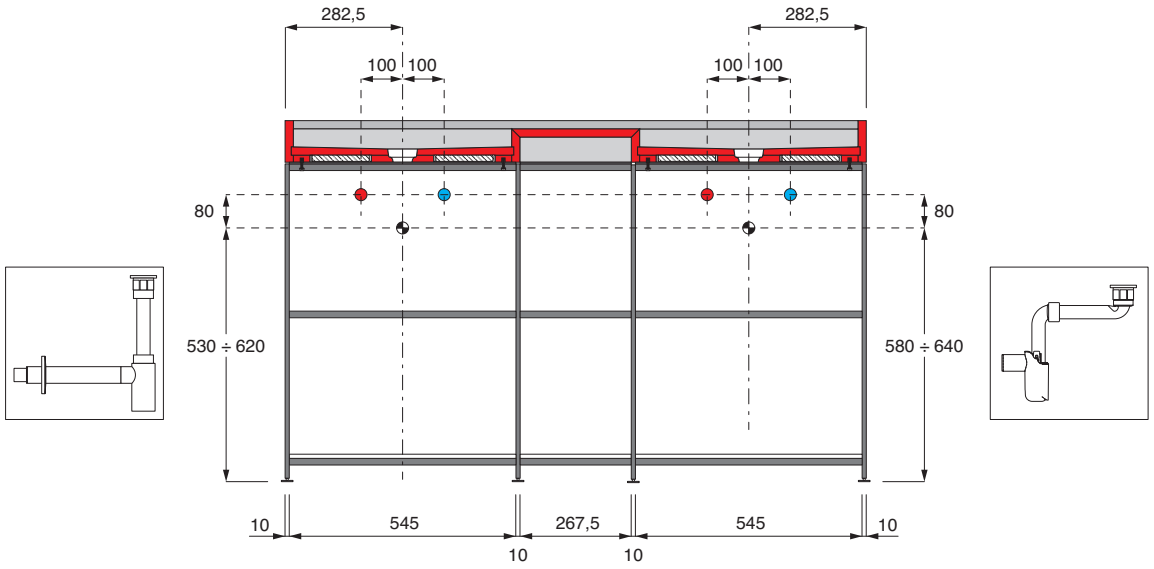

1a

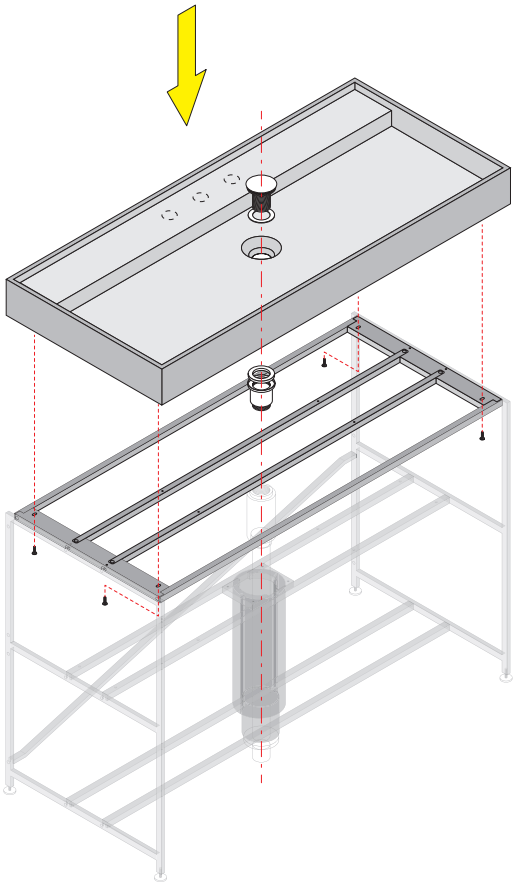

2a

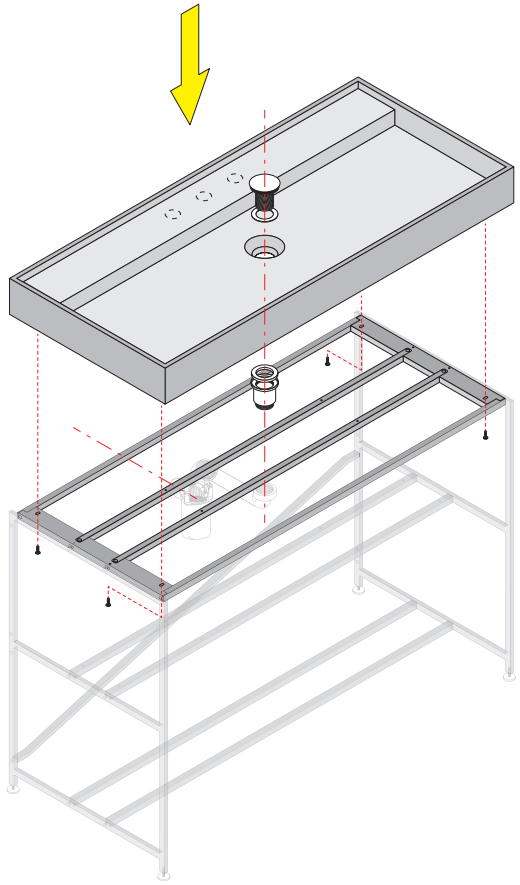

2b

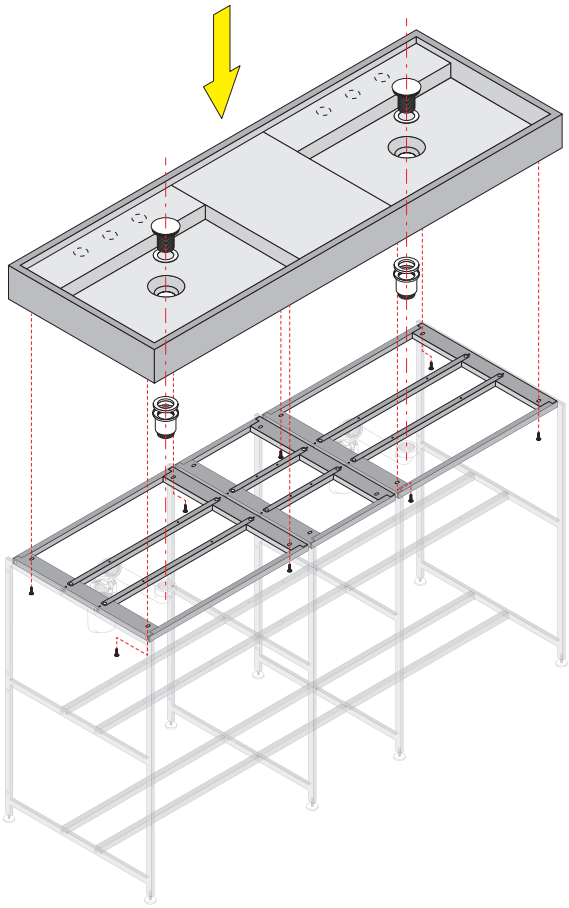

BOFFI s.p.a. - Lentate sul Seveso (MB) - via Oberdan, 70
Tel. 0362/534.1 r.a. - Fax 0362/565077