PHW

I **ISTRUZIONI DI MONTAGGIO**
Lavabo **WNPHAA01**

GB **ASSEMBLY INSTRUCTIONS**
Wash-basin **WNPHAA01**

F **INSTRUCTIONS DE MONTAGE**
Lavabo **WNPHAA01**

D **MONTAGEANLEITUNGEN**
Waschbecken **WNPHAA01**

Dimensioni d'ingombro e quote di fissaggio - Overall dimensions and fixing points
Dimensions d'encombrement et fixations - Maßen und Befestigungshöhe

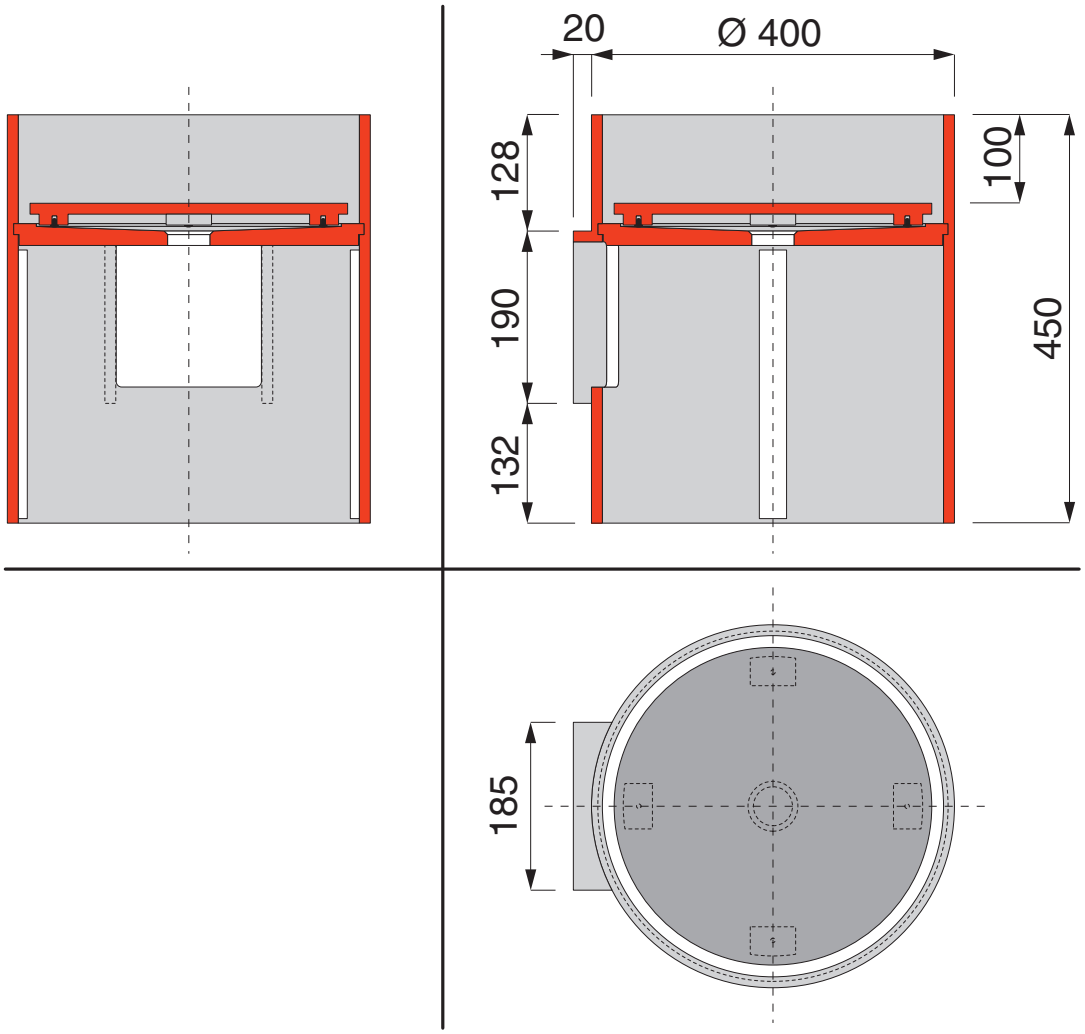

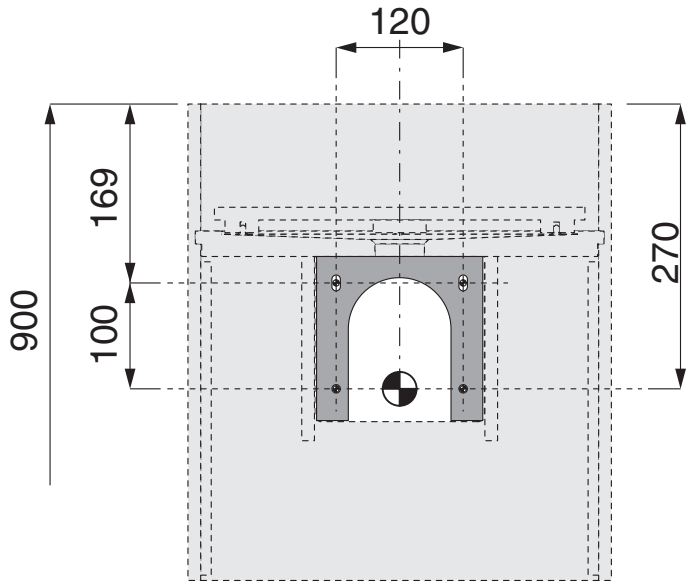

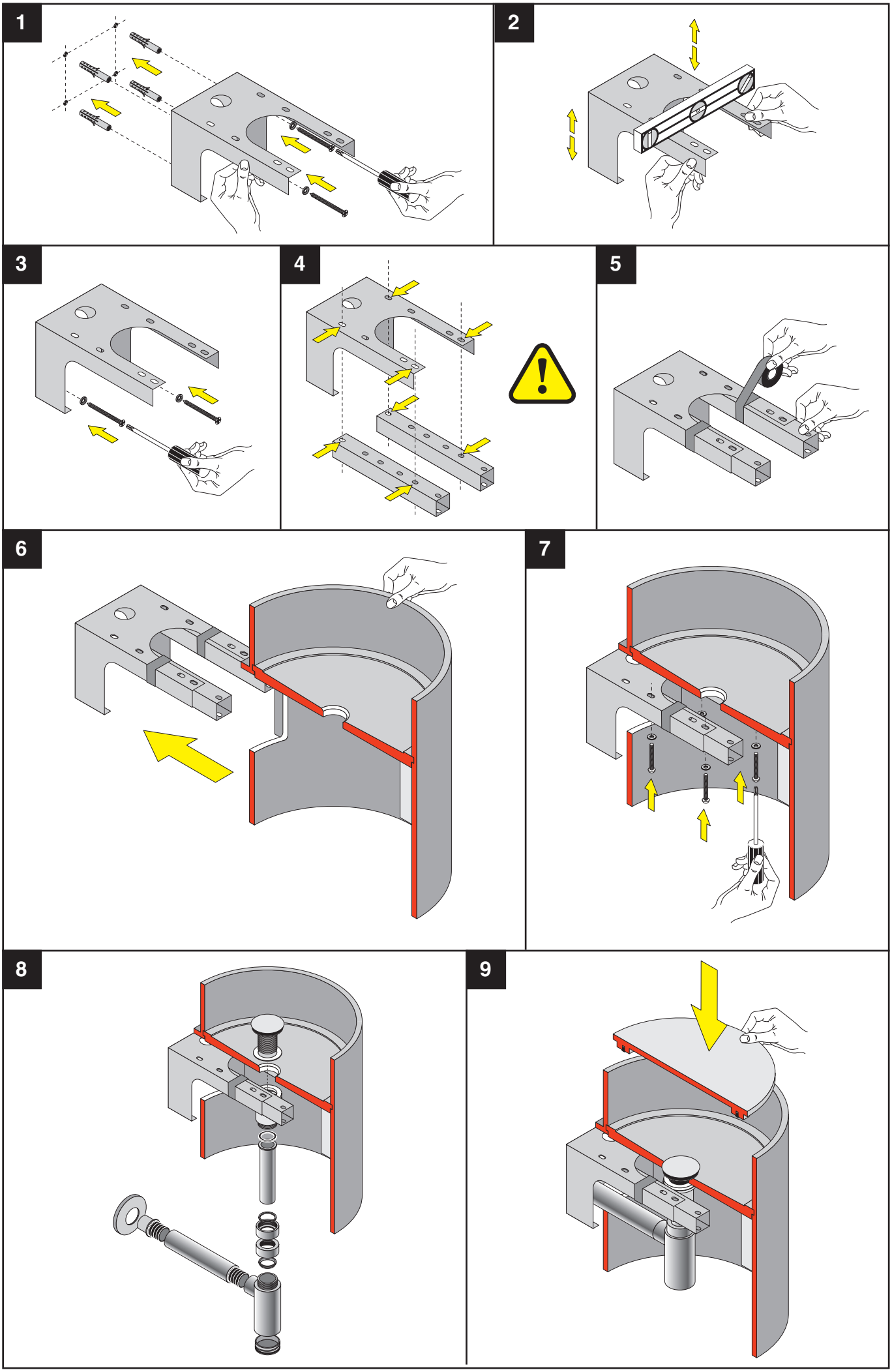
1
2
3
4
5
6
7
8
9

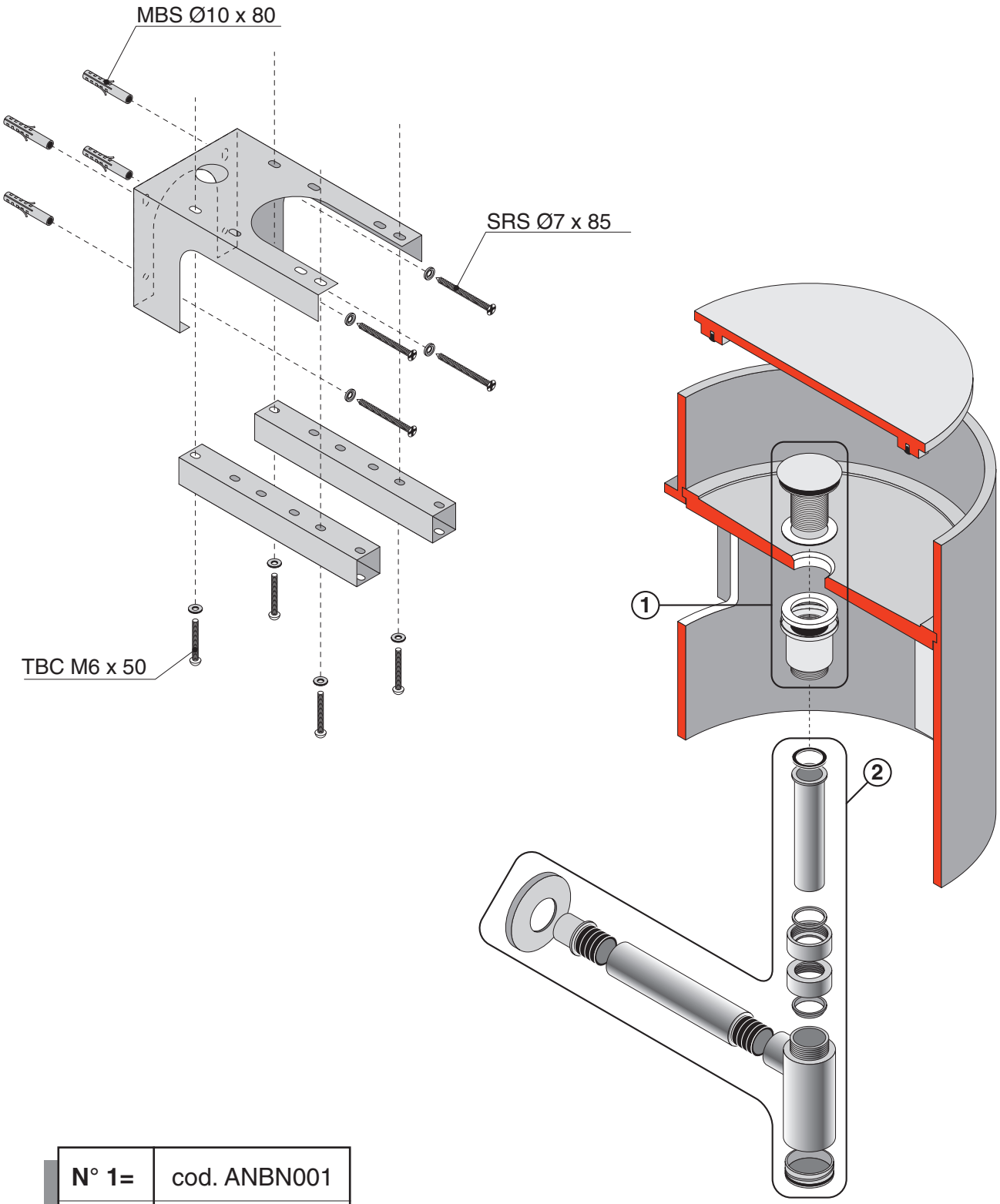

N° 1=	cod. ANBN001
N° 2=	cod. ANBM002

BOFFI s.p.a. - Lentate sul Seveso (MB) - via Oberdan, 70
Tel. 0362/534.1 r.a. - Fax 0362/565077