FLOE
FLOE STONE

I **ISTRUZIONI DI MONTAGGIO**
Lavabo con piano integrato, senza troppopieno

GB **ASSEMBLY INSTRUCTIONS**
Washbasin with integrated top, without overflow

F **INSTRUCTIONS DE MONTAGE**
Lavabo avec plan intégré, sans trop-plein

D **MONTAGEANLEITUNGEN**
Waschbecken mit integrierter Platte, ohne Überlauf

Dimensioni d'ingombro e quote di fissaggio - Overall dimensions and fixing points
Dimensions d'encombrement et fixations - Maßen und Befestigungshöhe

WRFEAF01 (Cristalplant®, U.S.A., CANADA cUPC® APPROVED)

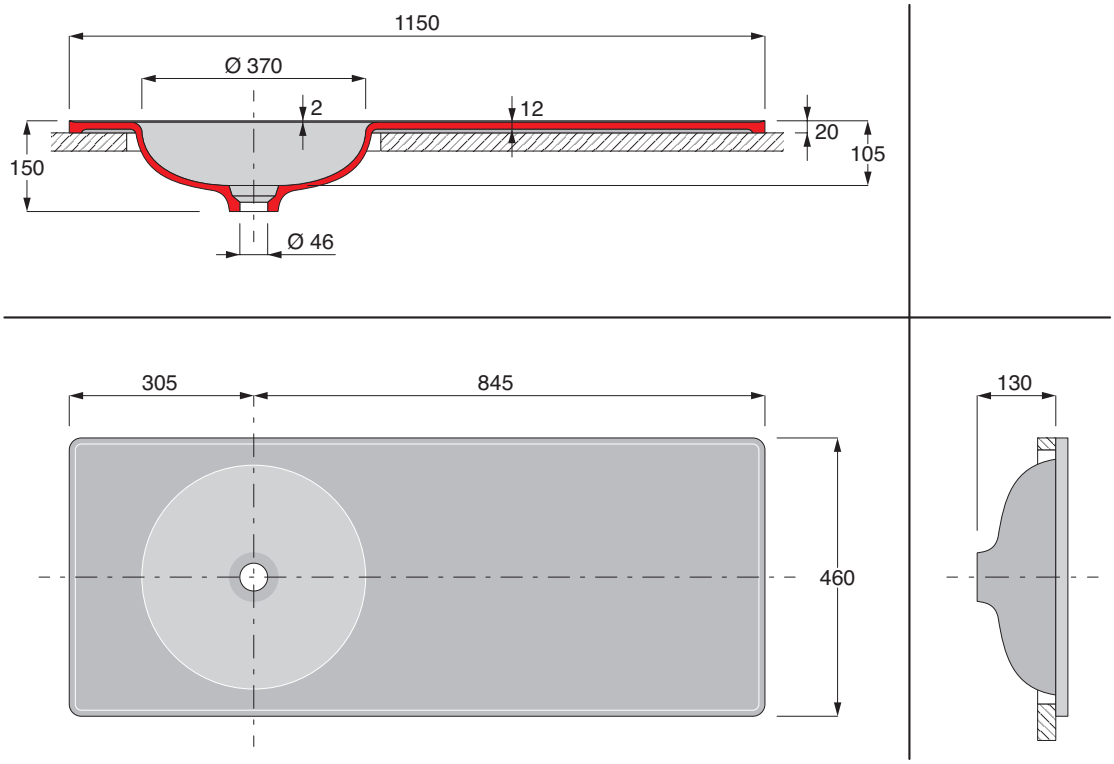

WRFEAF02 (Cristalplant®, U.S.A., CANADA cUPC® APPROVED)

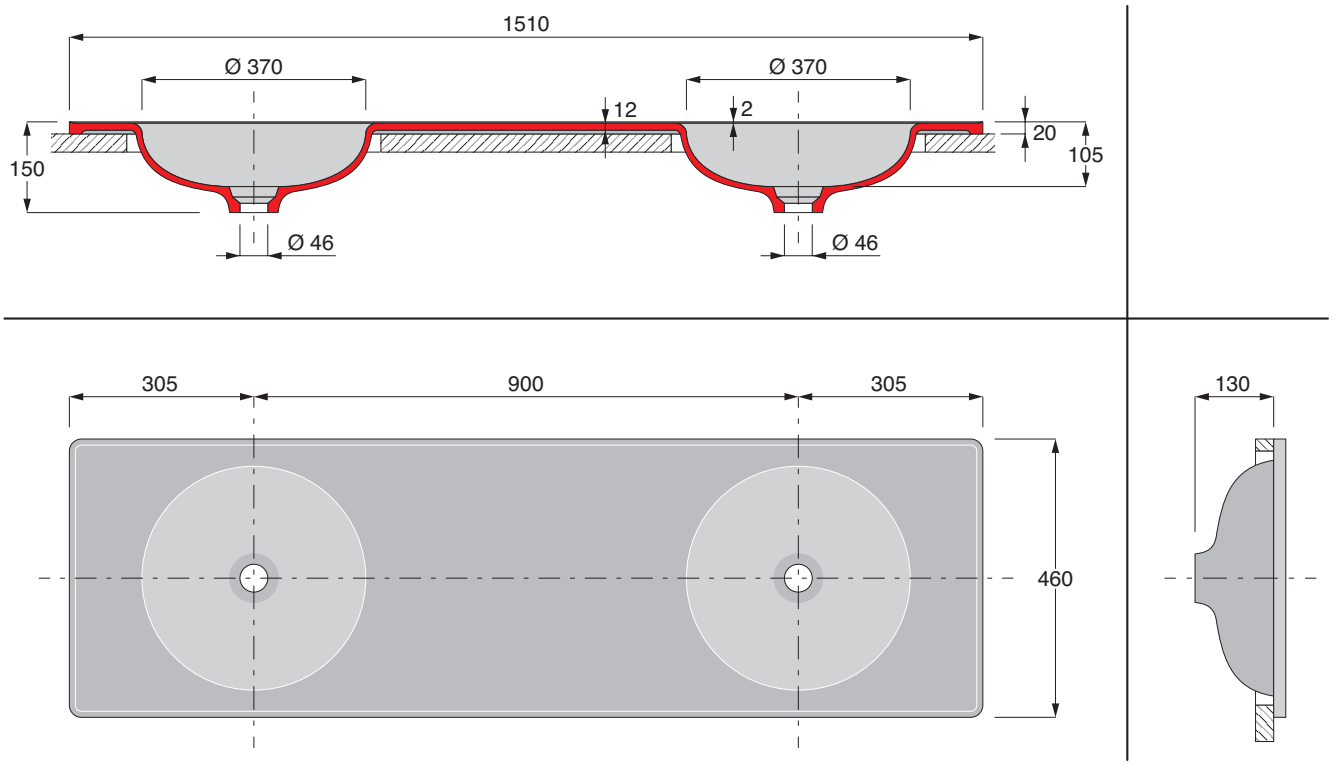

Dimensioni d'ingombro e quote di fissaggio - Overall dimensions and fixing points
Dimensions d'encombrement et fixations - Maßen und Befestigungshöhe

WMFEAF01 - WMFEAF02 -WMFEAF03 -WMFEAF04 -WMFEAF05 (Stone)

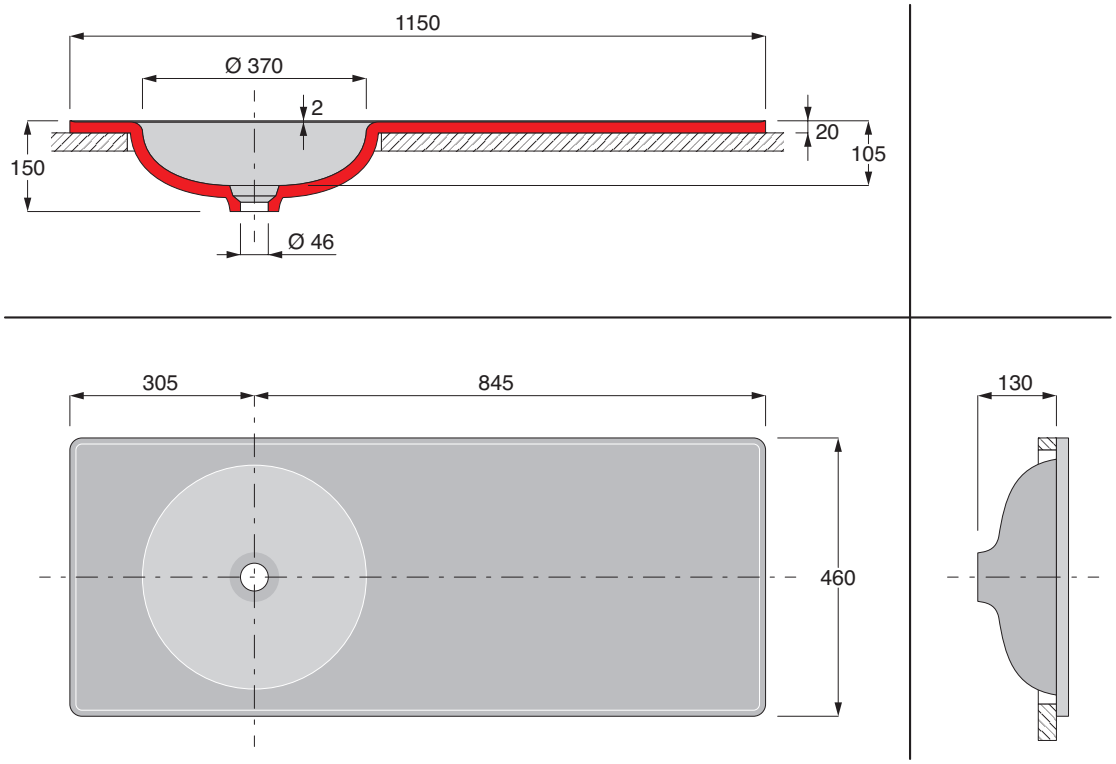

WMFEAF06 - WMFEAF07 -WMFEAF08 -WMFEAF09 -WMFEAF10 (Stone)

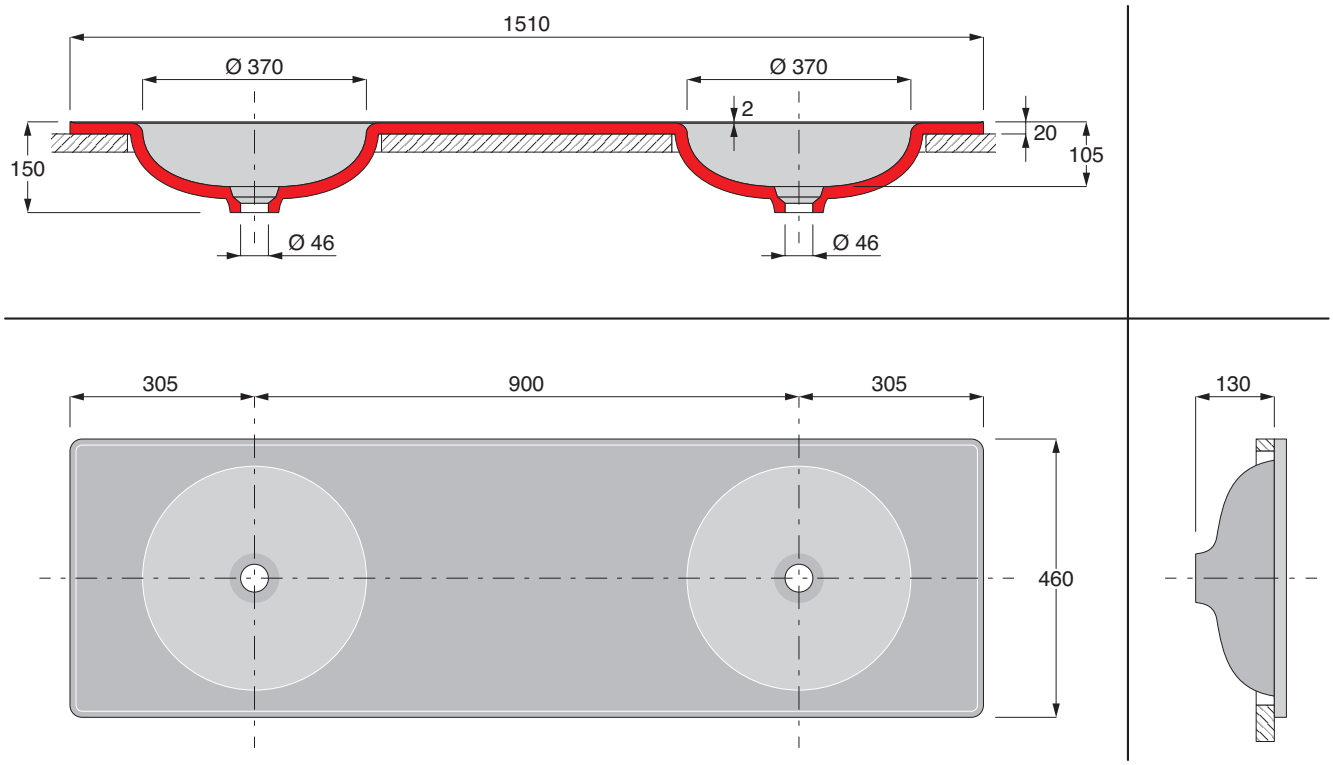

1

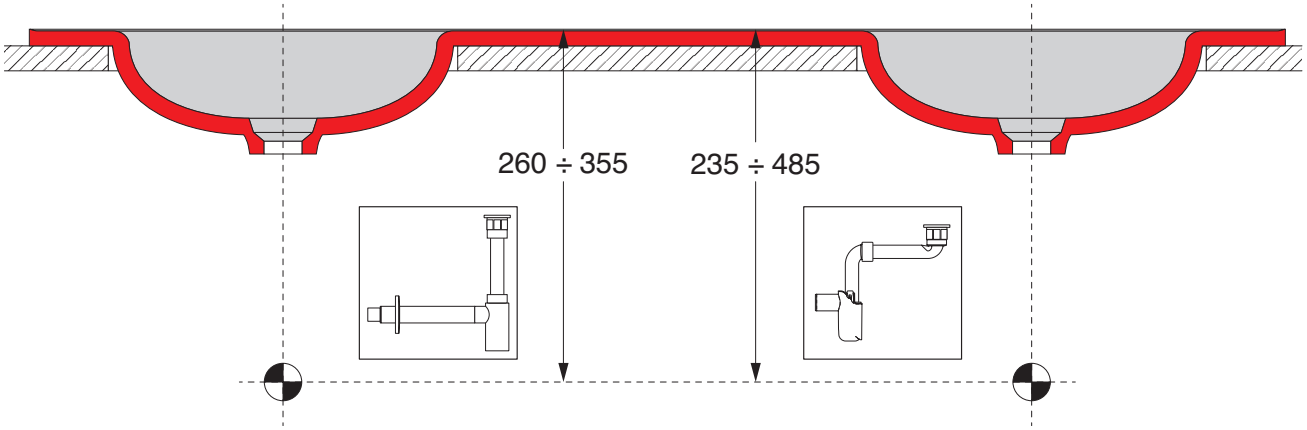

2

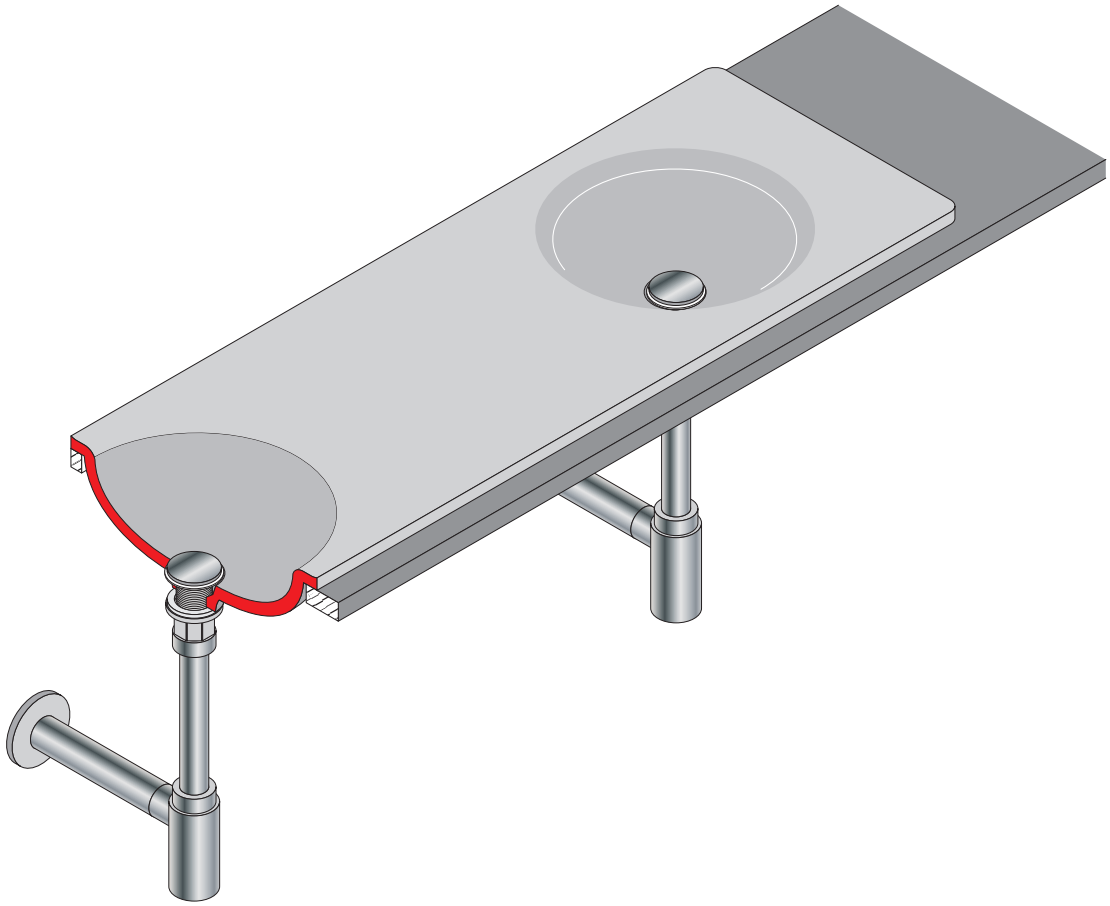

BOFFI s.p.a. - Lentate sul Seveso (MB) - via Oberdan, 70
Tel. 0362/534.1 r.a. - Fax 0362/565077