101

COPENHAGEN



COLUMN TABLE

With its geometric and sharp lines, the Column Table is inspired by the classic architectural shapes of columns and pillars, with the attempt to create a simple and flexible side table.

The Column Table is small and can therefore be used in many different interior schemes. The table fits perfect next to a lounge chair or combined with other side tables next to a sofa or lounge area. Due to its minimalistic design the Column Table can also stand alone as a sculpture by itself or be used as a pedestal for exhibiting objects.

Designed by Kristian Sofus Hansen & Tommy Hyldahl.

Product no: 223018

Type: Table

Colour: Sand

Material: Fiber Concrete

Care instructions:
Use a soft dry cloth to clean the product.
Do not use household cleaners.
Not frost-proof

Dimensions: L25 / W25 / H50

Country of origin: CN

Product weight: 19 Kgs

Packaging:
Dimensions: L32 / W32 / H61
Total weight incl. product: 20,5 Kgs
Number of parcels: 1
Material: Brown cardboard

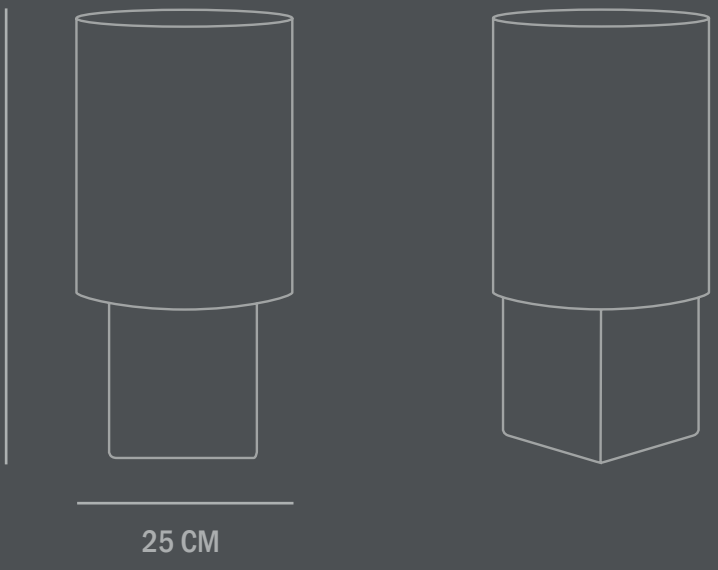

101 COPENHAGEN ©