101

COPENHAGEN



KAMODO CHAIR

Named after traditional Japanese clay ovens, the Kamado Chair emphasizes unique Japanese aesthetics in a minimalistic fiber concrete lounge chair. Kamado means "place for the cauldron" and the traditional ovens where build directly on the ground with clay. Air openings around the floor level created the impression of a set of legs, which has been used as a reference for the front legs of the Kamado Chair. A sort of asymmetry where usually found in the first ovens, which is emphasized in Kamado Chair with the one-sided armrest for an increased and relaxing seating comfort.

The chair is cast in lightweight fiber concrete, creating a unique surface texture, and increasing the overall mobility of the chair. Each piece is hand painted to create a textured and unique surface. Emphasizing the fine balance between sharp architectural lines and Japanese aesthetics, the Kamado Chair is a sculptural statement piece with a compelling seating comfort. Designed by Kristian Sofus Hansen & Tommy Hyldahl.

Product no: 221022

Type: Chair

Colour: Coffee

Material: Fiber Concrete

Care instructions:
Use a soft dry cloth to clean the product.
Do not use household cleaners.

Dimensions: L54 / W62 /H72 CM
Seat height: / Seat depth:
Backrest height:

Country of origin: CN
Product weight:

Packaging:
Dimensions:
Total weight incl. product:
Number of parcels: 1
Material: Brown cardboard

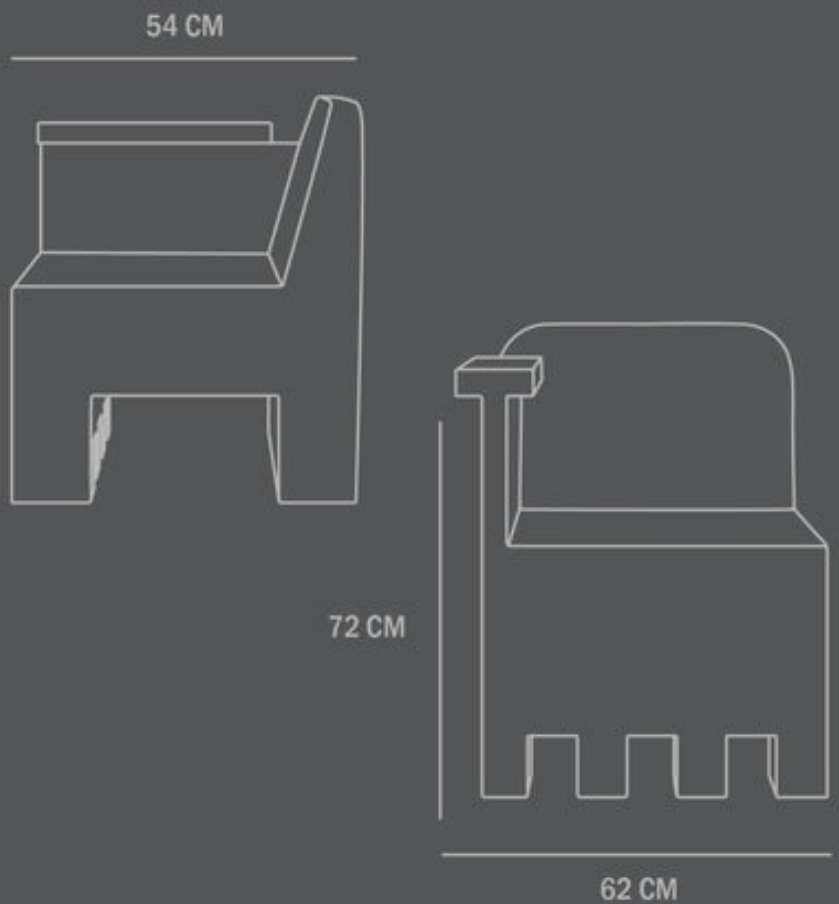

101 COPENHAGEN ©