VAN ROSSUM

EST. 1978

INSTRUCTIONS & CARE

ADJACENCIES BENCH

CARE

AIR HUMIDITY

Natural wood is sensitive to environmental factors, including ambient temperature and air humidity. Van Rossum furniture is best maintained in a relative air humidity of 60%. To ensure this optimal humidity, we recommend measuring your humidity with a hygrometer and, if required, increasing humidity with an air humidifier. This is particularly useful in new-build spaces, where advanced insulation can also create dry air. We also recommend ventilating rooms on a regular basis. During winter months, you may notice slight warping or fissures in your furniture. This is a normal characteristic of natural wood.

GENERAL PRODUCT SPECIFIC AND MATERIAL SPECIFIC CHARACTERISTICS

Van Rossum furniture is hand crafted from natural materials. Slight variation between products is normal, and reflects the unique character of each material, and the individual craft of each piece. As our furniture responds to its environment, for example exposure to light, gentle changes in appearance are also to be expected.

ASSEMBLING

Position the beams next to each other as shown on below sketch. Insert the metal pins in the holes. Slide 1 spacer over the metal pin. Connect each beam to the adjacent beam.

We do not recommend using replacement parts from other manufacturers on Van Rossum furniture. If you need to repair or replace an element of your furniture, please contact info@vanrossum.eu.

Enjoy Adjacencies!

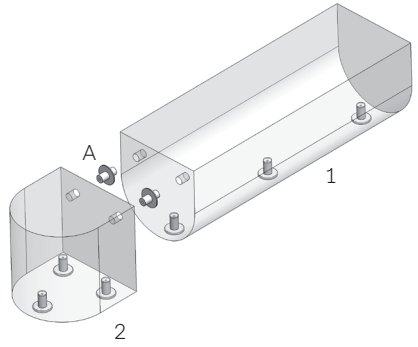

DELIVERED ELEMENTS

1 en 2) 2 Beams
A) 2 metal pins