moooi

BFF Sofa

MARCEL WANDERS STUDIO



The award-winning BFF Sofa by Marcel Wanders is everyone's new best friend! A high quality, soft yet firm modular sofa system, consisting of a wide variety of modules for endless configurations.

Detailing



The BFF Sofa is available in more than 200 fabrics.

BFF Sofa / Chaise Longue CL01 Left, Low

Dimensions

Product

WIDTH 99cm | 39"
HEIGHT 69cm | 27.2"
DEPTH 165cm | 65"

Packaging

WIDTH 105cm | 41.3"
HEIGHT 75cm | 29.5"
CUBAGE 1.61m^3 | 57.01ft^3
LENGTH 205cm | 80.7"
WEIGHT 59kg | 130.07lbs

Technical

ADDITIONAL

A modular sofa system that will befriend any interior. Design your own BFF Sofa and find out exact measurements with our configurator: https://www.moooi.com/bff-sofa

MATERIAL

Wooden frame, steel springs, foam.

HEIGHT ARMREST

56cm | 22"

SEAT DEPTH

135cm | 53.1"

SEAT HEIGHT

36cm | 14.2"

SEAT WIDTH

74cm | 29.1"

BFF Sofa / Chaise Longue CL02 Right, Low

Dimensions

Product

WIDTH 99cm | 39"
HEIGHT 69cm | 27.2"
DEPTH 165cm | 65"

Packaging

WIDTH 105cm | 41.3"
HEIGHT 75cm | 29.5"
CUBAGE 1.61m^3 | 57.01ft^3
LENGTH 205cm | 80.7"
WEIGHT 59kg | 130.07lbs

Technical

ADDITIONAL

A modular sofa system that will befriend any interior. Design your own BFF Sofa and find out exact measurements with our configurator: https://www.moooi.com/bff-sofa

MATERIAL

Wooden frame, steel springs, foam.

HEIGHT ARMREST

56cm | 22"

SEAT DEPTH

135cm | 53.1"

SEAT HEIGHT

36cm | 14.2"

SEAT WIDTH

74cm | 29.1"

BFF Sofa / Double Seater DE01 Low

Dimensions

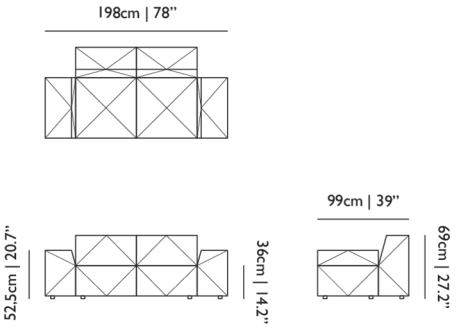

Product

WIDTH 198cm | 78"
HEIGHT 69cm | 27.2"
DEPTH 99cm | 39"

Packaging

WIDTH 105cm | 41.3"
HEIGHT 75cm | 29.5"
CUBAGE 1.61m^3 | 57.01ft^3
LENGTH 205cm | 80.7"
WEIGHT 86kg | 189.6lbs

Technical

ADDITIONAL

A modular sofa system that will befriend any interior. Design your own BFF Sofa and find out exact measurements with our configurator: https://www.moooi.com/bff-sofa

MATERIAL

Wooden frame, steel springs, foam.

HEIGHT ARMREST

56cm | 22"

SEAT DEPTH

69cm | 27.2"

SEAT HEIGHT

36cm | 14.2"

SEAT WIDTH

135cm | 53.1"

SEATING CAPACITY

2

BFF Sofa / Double Seater DE02 High

Dimensions

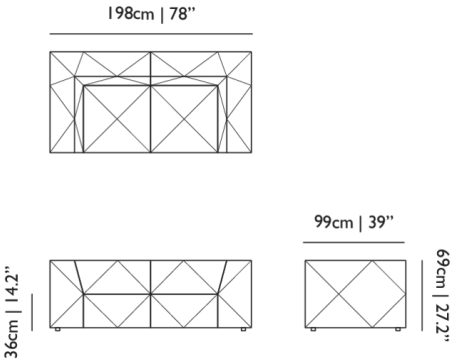

Product

WIDTH 198cm | 78"
HEIGHT 69cm | 27.2"
DEPTH 99cm | 39"

Packaging

WIDTH 105cm | 41.3"
HEIGHT 75cm | 29.5"
CUBAGE 1.61m^3 | 57.01ft^3
LENGTH 205cm | 80.7"
WEIGHT 92kg | 202.83lbs

Technical

ADDITIONAL

A modular sofa system that will befriend any interior. Design your own BFF Sofa and find out exact measurements with our configurator: https://www.moooi.com/bff-sofa

MATERIAL

Wooden frame, steel springs, foam.

HEIGHT ARMREST

69cm | 27.2"

SEAT DEPTH

69cm | 27.2"

SEAT HEIGHT

36cm | 14.2"

SEAT WIDTH

135cm | 53.1"

SEATING CAPACITY

2

BFF Sofa / Double element DE03 Right

Dimensions

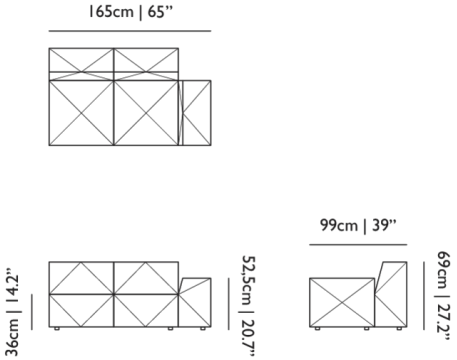

Product

WIDTH 165cm | 65"
HEIGHT 69cm | 27.2"
DEPTH 99cm | 39"

Packaging

WIDTH 105cm | 41.3"
HEIGHT 75cm | 29.5"
CUBAGE 1.61m^3 | 57.01ft^3
LENGTH 205cm | 80.7"
WEIGHT 74kg | 163.14lbs

Technical

ADDITIONAL

A modular sofa system that will befriend any interior. Design your own BFF Sofa and find out exact measurements with our configurator: https://www.moooi.com/bff-sofa

MATERIAL

Wooden frame, steel springs, foam.

HEIGHT ARMREST

56cm | 22"

SEAT DEPTH

69cm | 27.2"

SEAT HEIGHT

36cm | 14.2"

SEAT WIDTH

135cm | 53.1"

SEATING CAPACITY

2

BFF Sofa / Double element DE04 Left

Dimensions

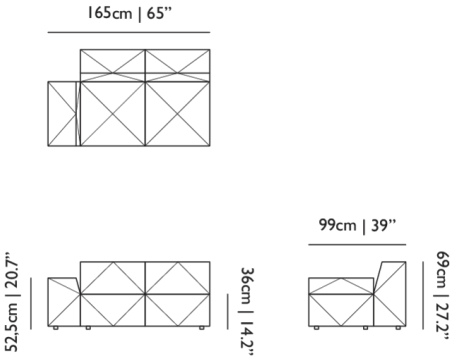

Product

WIDTH 165cm | 65"
HEIGHT 69cm | 27.2"
DEPTH 99cm | 39"

Packaging

WIDTH 105cm | 41.3"
HEIGHT 75cm | 29.5"
CUBAGE 1.61m^3 | 57.01ft^3
LENGTH 205cm | 80.7"
WEIGHT 74kg | 163.14lbs

Technical

ADDITIONAL

A modular sofa system that will befriend any interior. Design your own BFF Sofa and find out exact measurements with our configurator: https://www.moooi.com/bff-sofa

MATERIAL

Wooden frame, steel springs, foam.

HEIGHT ARMREST

56cm | 22"

SEAT DEPTH

69cm | 27.2"

SEAT HEIGHT

36cm | 14.2"

SEAT WIDTH

135cm | 53.1"

SEATING CAPACITY

2

BFF Sofa / Double element DE05 High

Dimensions

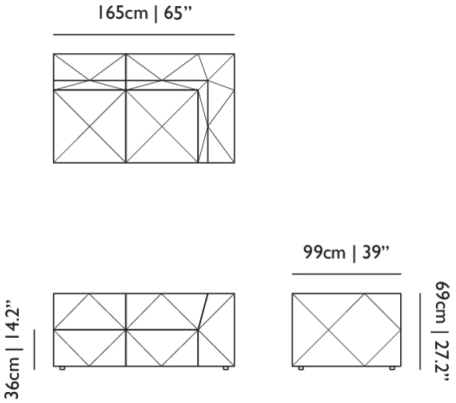

Product

WIDTH 165cm | 65"
HEIGHT 69cm | 27.2"
DEPTH 99cm | 39"

Packaging

WIDTH 105cm | 41.3"
HEIGHT 75cm | 29.5"
CUBAGE 1.61m^3 | 57.01ft^3
LENGTH 205cm | 80.7"
WEIGHT 77kg | 169.76lbs

Technical

ADDITIONAL

A modular sofa system that will befriend any interior. Design your own BFF Sofa and find out exact measurements with our configurator: https://www.moooi.com/bff-sofa

MATERIAL

Wooden frame, steel springs, foam.

HEIGHT ARMREST

69cm | 27.2"

SEAT DEPTH

69cm | 27.2"

SEAT HEIGHT

36cm | 14.2"

SEAT WIDTH

135cm | 53.1"

SEATING CAPACITY

2

BFF Sofa / Double element DE06 High

Dimensions

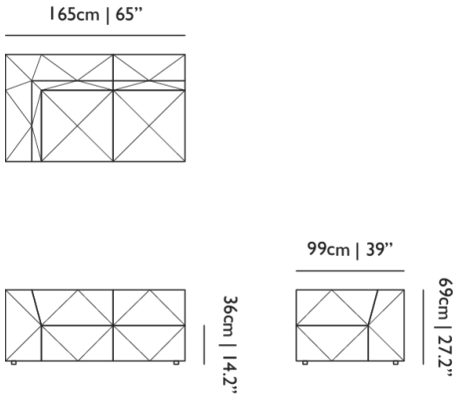

Product

WIDTH 165cm | 65"
HEIGHT 69cm | 27.2"
DEPTH 99cm | 39"

Packaging

WIDTH 105cm | 41.3"
HEIGHT 75cm | 29.5"
CUBAGE 1.61m^3 | 57.01ft^3
LENGTH 205cm | 80.7"
WEIGHT 77kg | 169.76lbs

Technical

ADDITIONAL

A modular sofa system that will befriend any interior. Design your own BFF Sofa and find out exact measurements with our configurator: https://www.moooi.com/bff-sofa

MATERIAL

Wooden frame, steel springs, foam.

HEIGHT ARMREST

69cm | 27.2"

SEAT DEPTH

69cm | 27.2"

SEAT HEIGHT

36cm | 14.2"

SEAT WIDTH

135cm | 53.1"

SEATING CAPACITY

2

BFF Sofa / Double element DE07 Dormeuse

Dimensions

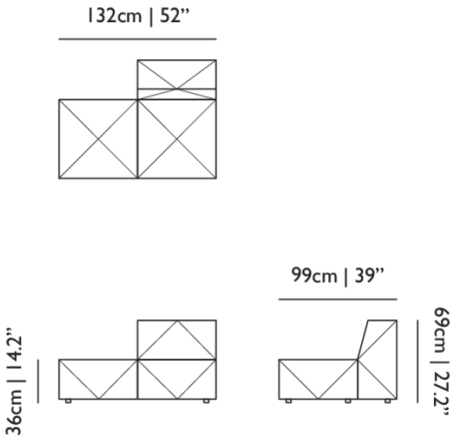

Product

WIDTH 132cm | 52"
HEIGHT 69cm | 27.2"
DEPTH 99cm | 39"

Packaging

WIDTH 105cm | 41.3"
HEIGHT 75cm | 29.5"
CUBAGE 1.1m^3 | 38.93ft^3
LENGTH 140cm | 55.1"
WEIGHT 47kg | 103.62lbs

Technical

ADDITIONAL

A modular sofa system that will befriend any interior. Design your own BFF Sofa and find out exact measurements with our configurator: https://www.moooi.com/bff-sofa

MATERIAL

Wooden frame, steel springs, foam.

SEAT DEPTH

69cm | 27.2"

SEAT HEIGHT

36cm | 14.2"

SEAT WIDTH

135cm | 53.1"

SEATING CAPACITY

2

BFF Sofa / Double element DE08 Dormeuse

Dimensions

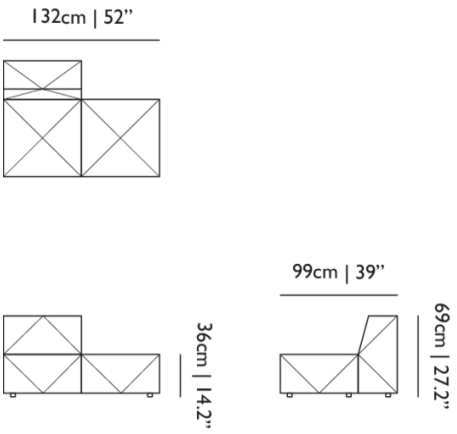

Product

WIDTH 132cm | 52"
HEIGHT 69cm | 27.2"
DEPTH 99cm | 39"

Packaging

WIDTH 105cm | 41.3"
HEIGHT 75cm | 29.5"
CUBAGE 1.1m^3 | 38.93ft^3
LENGTH 140cm | 55.1"
WEIGHT 47kg | 103.62lbs

Technical

ADDITIONAL

A modular sofa system that will befriend any interior. Design your own BFF Sofa and find out exact measurements with our configurator: https://www.moooi.com/bff-sofa

MATERIAL

Wooden frame, steel springs, foam.

SEAT DEPTH

69cm | 27.2"

SEAT HEIGHT

36cm | 14.2"

SEAT WIDTH

135cm | 53.1"

SEATING CAPACITY

2

BFF Sofa / Double element DE09 no armrest

Dimensions

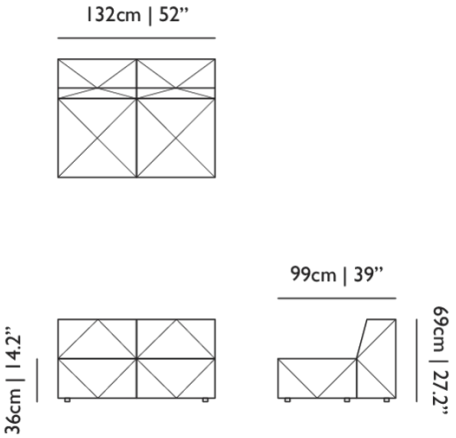

Product

WIDTH 132cm | 52"
HEIGHT 69cm | 27.2"
DEPTH 99cm | 39"

Packaging

WIDTH 105cm | 41.3"
HEIGHT 75cm | 29.5"
CUBAGE 1.1m^3 | 38.93ft^3
LENGTH 140cm | 55.1"
WEIGHT 62kg | 136.69lbs

Technical

ADDITIONAL

A modular sofa system that will befriend any interior. Design your own BFF Sofa and find out exact measurements with our configurator: https://www.moooi.com/bff-sofa

MATERIAL

Wooden frame, steel springs, foam.

SEAT DEPTH

69cm | 27.2"

SEAT HEIGHT

36cm | 14.2"

SEAT WIDTH

135cm | 53.1"

SEATING CAPACITY

2

BFF Sofa / Triple Seater TE01 Low

Dimensions

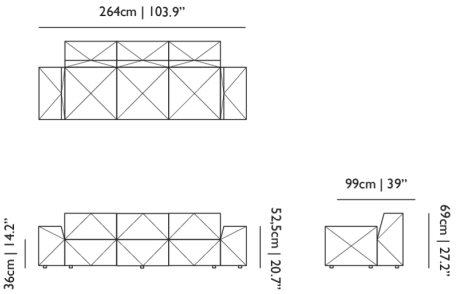

Product

WIDTH 264cm | 103.9"
HEIGHT 69cm | 27.2"
DEPTH 99cm | 39"

Packaging

WIDTH 105cm | 41.3"
HEIGHT 75cm | 29.5"
CUBAGE 2.13m^3 | 75.09ft^3
LENGTH 270cm | 106.3"
WEIGHT 117kg | 257.94lbs

Technical

ADDITIONAL

A modular sofa system that will befriend any interior. Design your own BFF Sofa and find out exact measurements with our configurator: https://www.moooi.com/bff-sofa

MATERIAL

Wooden frame, steel springs, foam.

HEIGHT ARMREST

56cm | 22"

SEAT DEPTH

69cm | 27.2"

SEAT HEIGHT

36cm | 14.2"

SEAT WIDTH

200cm | 78.7"

SEATING CAPACITY

3

BFF Sofa / Triple Seater TE02 High

Dimensions

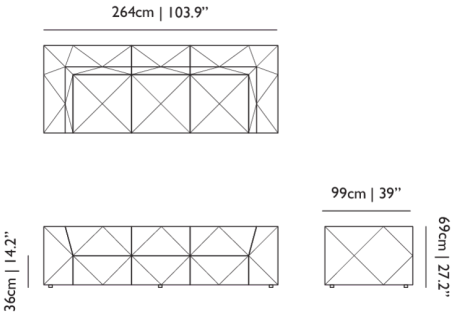

Product

WIDTH 264cm | 103.9"
HEIGHT 69cm | 27.2"
DEPTH 99cm | 39"

Packaging

WIDTH 105cm | 41.3"
HEIGHT 75cm | 29.5"
CUBAGE 2.13m^3 | 75.09ft^3
LENGTH 270cm | 106.3"
WEIGHT 123kg | 271.17lbs

Technical

ADDITIONAL

A modular sofa system that will befriend any interior. Design your own BFF Sofa and find out exact measurements with our configurator: https://www.moooi.com/bff-sofa

MATERIAL

Wooden frame, steel springs, foam.

HEIGHT ARMREST

69cm | 27.2"

SEAT DEPTH

69cm | 27.2"

SEAT HEIGHT

36cm | 14.2"

SEAT WIDTH

200cm | 78.7"

SEATING CAPACITY

3

BFF Sofa / Triple element TE03 Right

Dimensions

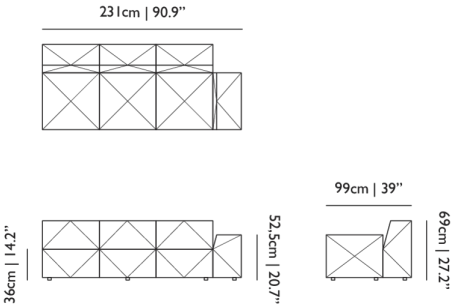

Product

WIDTH 198cm | 78"
HEIGHT 69cm | 27.2"
DEPTH 69cm | 27.2"

Packaging

WIDTH 105cm | 41.3"
HEIGHT 75cm | 29.5"
CUBAGE 2.13m^3 | 75.09ft^3
LENGTH 270cm | 106.3"
WEIGHT 105kg | 231.49lbs

Technical

ADDITIONAL

A modular sofa system that will befriend any interior. Design your own BFF Sofa and find out exact measurements with our configurator: https://www.moooi.com/bff-sofa

MATERIAL

Wooden frame, steel springs, foam.

HEIGHT ARMREST

69cm | 27.2"

SEAT DEPTH

69cm | 27.2"

SEAT HEIGHT

36cm | 14.2"

SEAT WIDTH

200cm | 78.7"

SEATING CAPACITY

3

BFF Sofa / Triple element TE04 Left, low

Dimensions

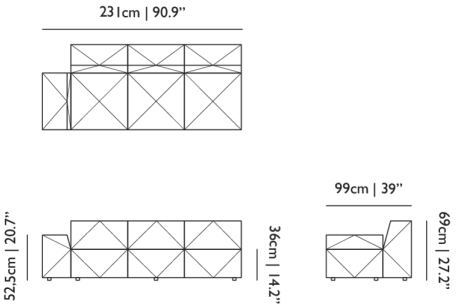

Product

WIDTH 231cm | 90.9"
HEIGHT 69cm | 27.2"
DEPTH 99cm | 39"

Packaging

WIDTH 105cm | 41.3"
HEIGHT 75cm | 29.5"
CUBAGE 2.13m^3 | 75.09ft^3
LENGTH 270cm | 106.3"
WEIGHT 108kg | 238.1lbs

Technical

ADDITIONAL

A modular sofa system that will befriend any interior. Design your own BFF Sofa and find out exact measurements with our configurator: https://www.moooi.com/bff-sofa

MATERIAL

Wooden frame, steel springs, foam.

HEIGHT ARMREST

56cm | 22"

SEAT DEPTH

69cm | 27.2"

SEAT HEIGHT

36cm | 14.2"

SEAT WIDTH

200cm | 78.7"

SEATING CAPACITY

3

BFF Sofa / Triple element TE05 Right, High

Dimensions

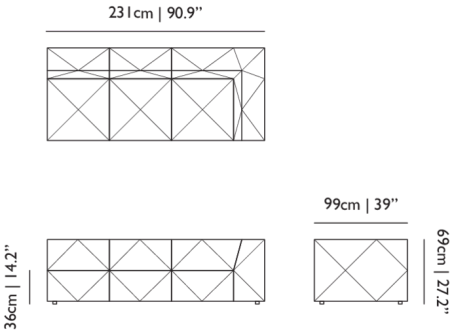

Product

WIDTH 231cm | 90.9"
HEIGHT 69cm | 27.2"
DEPTH 99cm | 39"

Packaging

WIDTH 105cm | 41.3"
HEIGHT 75cm | 29.5"
CUBAGE 2.13m^3 | 75.09ft^3
LENGTH 270cm | 106.3"
WEIGHT 105kg | 231.49lbs

Technical

ADDITIONAL

A modular sofa system that will befriend any interior. Design your own BFF Sofa and find out exact measurements with our configurator: https://www.moooi.com/bff-sofa

MATERIAL

Wooden frame, steel springs, foam.

HEIGHT ARMREST

69cm | 27.2"

SEAT DEPTH

69cm | 27.2"

SEAT HEIGHT

36cm | 14.2"

SEAT WIDTH

200cm | 78.7"

SEATING CAPACITY

3

BFF Sofa / Triple element TE06 Left, High

Dimensions

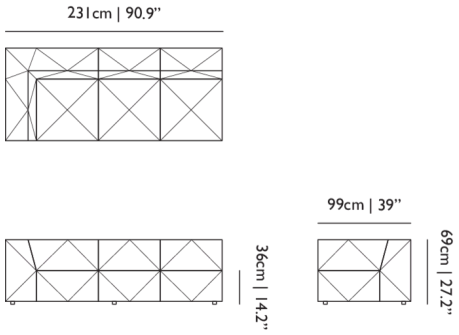

Product

WIDTH 231cm | 90.9"
HEIGHT 36cm | 14.2"
DEPTH 69cm | 27.2"

Packaging

WIDTH 105cm | 41.3"
HEIGHT 75cm | 29.5"
CUBAGE 2.13m^3 | 75.09ft^3
LENGTH 270cm | 106.3"
WEIGHT 108kg | 238.1lbs

Technical

ADDITIONAL

A modular sofa system that will befriend any interior. Design your own BFF Sofa and find out exact measurements with our configurator: https://www.moooi.com/bff-sofa

MATERIAL

Wooden frame, steel springs, foam.

HEIGHT ARMREST

69cm | 27.2"

SEAT DEPTH

69cm | 27.2"

SEAT HEIGHT

36cm | 14.2"

SEAT WIDTH

200cm | 78.7"

SEATING CAPACITY

3